THÈSE

En vue de l'obtention du

DOCTORAT DE L'UNIVERSITÉ DE TOULOUSE

Délivré par *Institut National Polytechnique de Toulouse*
Discipline ou spécialité : *Génie Industriel*

Présentée par *Mujtaba Hassan AGHA*
Le *30 Octobre 2009*

Titre : *Integrated Management of Energy and Production: Scheduling of Batch Process and Combined Heat & Power (CHP) Plant*

JURY

M. Alexandre Dolgui, Professeur à Ecole Nationale Supérieure des Mines de Saint-Etienne, Rapporteur
M. Sandro Macchietto, Professeur à Imperial College London, United Kingdom, Rapporteur
M. François Maréchal Professeur à Ecole Polytechnique Federale de Lausanne,Suisse, Rapporteur
M. Damien Ménard, Ingénieur R&D Project Leader, CREED, Limay, Membre
M. Jean Marc Le Lann, Professeur à l'INPT-ENSIACET, Toulouse, Membre
M. Alain Haït, Professeur Associé l'ISAE-SUPAERO, Toulouse, Membre
M. Gilles Hetreux, Maître de Conférences à l'INPT-ENSIACET, Toulouse, Membre
Mme Raphaële THERY, Maître de conférences à l'INPT-ENSIACET, Membre

---

Ecole doctorale : *EdSYS (Ecole Doctorale Système)*
Unité de recherche : *Laboratoire de Genie Chimique*
Directeur(s) de Thèse : *M. Jean Marc Le Lann*
Co-directeur(s) de Thèse : *M. Alain Haït, Mme Raphaële Thery*
Rapporteurs : *M. Alexandre Dolgui, M. Sandro Macchietto et M. François Maréchal*

Dedicated to,

my parents Zahida and Sajjad Hussain

SYNOPSIS

Abstract

The issue of energy has emerged as one of the greatest challenges facing the mankind. The search is on for finding alternative sources of energy that will replace fossil fuels as the primary source of energy. However, for the foreseeable future, fossil fuels will remain the main source of energy. Therefore, it is of paramount importance to devise methodologies for more rational use of energy in all walks of human life.

In the industrial perspective, the deployment of site utility system (generally CHP plants) provides a great potential source for energy savings. However, the management of such type of industrial units is traditionally carried out using sequential three step approach: scheduling of the production plant, estimation of the utility needs of production plant and finally scheduling of the site utility system. In this kind of approach, all the focus is placed on the production plant and the utility system is treated as its subsidiary. To improve the decision-making process, this thesis proposes an integrated approach which addresses this imbalance by carrying out simultaneous and coherent scheduling of batch production plant and site utility system.

The proposed methodology relies on discrete time modeling and uses Mixed Integer Linear Programming (MILP). Moreover, to permit an efficient and generic formulation of various kinds of industrial problems, a new scheduling framework called Extended Resource Task Network (ERTN) has been developed. The ERTN framework (an extension of existing RTN framework) allows for accurate representation and scheduling of any type of production plant and any type of site utility system.

The results show that the integrated approach leads to better synchronization between production plant and site utility system. Thereby, the integrated approach leads to significant reduction in energy costs and decrease in harmful gas emissions.

Keywords:

Energy efficiency, Operations Research, Scheduling, Batch & semi-continuous production plant, ERTN framework, CHP plant, MILP.

Résume

Dans un contexte de développement durable, la question énergétique constitue un des problèmes majeurs des décennies à venir. Bien que la solution pour faire face à la raréfaction de certaines ressources, l'augmentation globale de la demande l'augmentation des émissions de CO_2, réside dans le développement des énergies renouvelables, il est clair que ces nouvelles technologies ne seront matures que dans plusieurs décennies. A court terme, les énergies fossiles demeureront la source principale d'énergie primaire. Il est donc essentiel de promouvoir de nouvelles méthodologies permettant une utilisation plus rationnelle de l'énergie.

Dans le secteur industriel, le développement de centrales de production d'utilités sur le site industriel (en général des centrales de cogénération) contribue grandement à l'amélioration de l'éfficacité énergétique des procédés. Traditionnellement, la gestion de ce type de système repose sur une approche séquentielle : ordonnancement de l'atelier de production, calcul des besoins énergétiques et planification de la centrale de

cogénération. Toutefois, dans ce type d'approche, l'accent est mis avant tout sur l'atelier de production, la centrale de cogénération étant considérée comme une unité esclave. Pour améliorer le processus de décision, cette thèse développe une approche intégrée pour l'ordonnancement simultanée et cohérent des ateliers de production et des centrales de production d'utilités.

La méthodologie proposée repose sur une formulation MILP à temps discret. Par ailleurs, une extension du formalisme RTN a été développée : les ERTN (« Extended Resource Task Network »). Celui-ci permet d'une part, de décrire de manière systématique les recettes et d'autre part, permet une modélisation explicite et générique des différents types de systèmes dont notamment les centrales d'utilités.

Les résultats montrent que l'approche intégrée permet d'obtenir une réduction notable du coût énergétique grâce une meilleure coordination des activités de production et de fabrication d'utilités. En effet, les tâches de production sont ordonnancées de manière à consommer sur les mêmes périodes les utilités générées simultanément par la centrale de cogénération, conduisant ainsi à une réduction significative du rapport quantité de biens fabriqués / quantité de carburant consommé et des émissions de gaz à effet de serre.

Mots clefs:

Efficacité énergétique, Recherche opérationnelle, Ordonnancement, Procédés batch et semi-continus, Formalisme ERTN, Centrale de cogénération, MILP.

ACKNOWLEDGEMENTS

It would not have been possible to write this dissertation without the help and support of the kind people around me, to only some of whom it is possible to give particular mention here.

First of all, I would like to express my gratitude to Dr. Jean Marc Le Lann (thesis director) for allowing me to conduct this research at Laboratoire de Génie Chimique (LGC) at ENSIACET-INPT. I am indebted to his academic and administrative contributions during the whole duration of my PhD studies.

I would also like to thank Dr. Alain Hait (thesis co-advisor) who accepted my candidature for the PhD study and has been a constant source of support and guidance for the last three years. I am greatly obliged for his advice and help that enabled me to develop a better understanding of the subject matter.

This dissertation would not have been possible without the good advice, support and friendship of my daily supervisor, Dr. Raphaele Thery (thesis co-advisor), which has been invaluable on both academic and personal level, for which I am extremely grateful. I thank her for the time, patience, effort and suggestions provided that were invaluable for the completion of this dissertation.

I greatly appreciate the role Dr. Gilles Hetreux played in the completion of this dissertation. Despite not being my direct advisor he accorded me a lot of his time. The formulation, development and resolution of computer applications and simulations were only possible due to his insight and constant guidance.

I would like to acknowledge HEC (Higher Education Commission, Pakistan) and SFERE, for the financial and administrative support provided for this dissertation.

I would like also like to thank the entire research group at LGC - my colleagues, the professors and the staff members that made my stay in Toulouse highly enjoyable and constructive. I would equally like to thank my friends Andy Crawford, Bilal Khawaja, Martin Leake, M. Ali Nizamani, Guillaume Barbut, Jitesh Nambiar, Shaeen Raja and Rizwan Zulfiqar for their strong support and encouragement during my PhD studies. Special thanks to Tarn Cricket Club and its members for all the relaxing and quality time, which undoubtedly eased the pressures of my studies.

Finally, I would like to emphasize my love and encomium to my family for their continuous encouragement and unconditional love. A special mention of my parents, whose innumerable sacrifices and unwavering support has allowed me reach this far in life. This dissertation is dedicated to them.

LIST OF PUBLICATIONS

Conference Publications

R. Thery, G. Hetreux, M. Agha, "Modèle intégré pour l'ordonnancement d'ateliers batch et la planification de centrales de cogénération". 7eme Conférence Internationale de Modélisation et Simulation, MOSIM 08, Paris, France, 31 March – 2 April 2008.

M.H. Agha, R. Thery, G. Hetreux, A. Hait, J.M le Lann, "Collaboration among companies for better energy management". 18th European Symposium on Computer Aided Process Engineering, ESCAPE 18, Lyon, France, 1- 4 June 2008.

M.H. Agha, R. Thery, G. Hetreux, A. Hait, J.M le Lann, "Vers un ordonnancement intégré des ateliers batch et des centrales de cogénération associées". 8ème Congrès International de Génie Industriel, CIGI 2009, Tarbes, France, 10 - 12 June 2009.

M.H. Agha, R. Thery, G. Hetreux, A. Hait, J.M le Lann, "Integrated production and utility system approach for optimizing industrial unit operations". 2nd International congress on Green engineering, GPE-EPIC 2009, Venice, Italy, 14 - 17 June 2009.

M.H. Agha, R. Thery, G. Hetreux, A. Hait, J.M le Lann, "Algorithm for integrated production and utility system scheduling for batch plants". 10th International Symposium on Process Systems Engineering, PSE 20009, Salvador, Brazil, 16-20 August.

M.H. Agha, R. Thery, G. Hetreux, A. Hait, J.M le Lann, "Optimization of auto-production using industrial unit". 8th World Congress of Chemical Engineering, WCCE8 2009, Montreal, Canada 23 - 27 August 2009.

Journal Publications

M.H. Agha, R. Thery, G. Hetreux, A. Hait, J.M le Lann, "Integrated production and utility system approach for optimizing industrial unit operations".Energy (2009), doi:10.1016/j.energy.2009.10.032

An extended framework for integrated production and utility system scheduling
M.H. Agha, R. Thery, G. Hetreux, A. Hait, J.M le Lann
International Journal of Production Research
Status: In process of being written (selected as conference paper to be published)

TABLE OF CONTENTS

INTRODUCTION 1

CHAPTER I: GENERAL CONTEXT OF THE STUDY 5

I.1 The Energy Supply Chain 7

I.2 Evolution Of Energy Context 9
I.2.1 Dramatic Rise of the Global Energy Consumption 9
I.2.2 The Case of the Industrial Sector 10
I.2.2.1 Trends in industrial-sector energy consumption 11
I.2.2.2 Classification of industrial sector based on energy consumption 12
I.2.2.3 Energy supply to the industrial unit: a centralized system 14
I.2.3 Impact on Environment 16

I.3 Solution To The Energy Issue In Industrial Perspective 16
I.3.1 Long Term Solution: Finding Alternative for Energy Conversion 17
I.3.2 Short to Medium Term Solutions: Promoting a More Rational Use of Energy 17
I.3.3 Scientific Gaps 17

I.4 Scope Of The Study 19

CHAPTER 2: TOWARDS MORE RATIONAL USE OF ENERGY: STATE OF ART 21

II.1 An Emerging Theme In Research Programs 23
II.1.1 Government Programs 23
II.1.2 Institutional Programs: CNRS 24
II.1.3 The Initiatives of the Industry 25
II.1.3.1 Adopting energy standards 25
II.1.3.2 Top-Down approach 25
II.1.3.3 Bottom-Up approach 26

II.2 Potential Means For Reducing Energy Consumption Of Industrial Sites 26
II.2.1 Total Processing System / Industrial Unit: Definition 26
II.2.2 Improving Energy Efficiency for Production Plants 27
II.2.2.1 Exergy analysis: an efficient tool for identifying process inefficiencies 27
II.2.2.2 Process intensification 31
II.2.3 More Systematic Use of Heat Integration Concept 33
II.2.3.1 Pinch analysis of continuous processes 34
II.2.3.2 Pinch analysis of batch processes 38
II.2.4 Use of Site Utility Systems 40

II.2.4.1 Types of technology used in site utility system 41
II.2.4.2 Improving energy efficiency of site utility system 43

II.3 Management OF Total Processing Systems Based upon batch Production 47
II.3.1 The Sequential Approach: Traditionally Used In Industry 47
II.3.2 Scheduling Under Energy Constraints 48
II.3.2.1 Integrated scheduling and heat integration 48
II.3.2.2 Scheduling and management of utilities 49
II.3.3 Towards Integration of Three Functions 50

II.4 CONCLUSION: FOCUS OF THE PRESENT THESIS 51

CHAPITRE III : TOOLS AND METHODS FOR ENERGY EFFICIENT BATCH PROCESS SCHEDULING 53

III.1 Scheduling In Batch Process Industry 55
III.1.1 Brief Background 55
III.1.2 Features of Batch Process Scheduling Problem 56
III.1.3 Using Mixed Integer Linear Programming (MILP) 58
III.1.3.1 Time representation 58
III.1.3.2 Material balances 59
III.1.3.3 Objective function 60
III.1.4 Research Direction 61

III.2 Frameworks For Batch Process Scheduling Problems 61
III.2.1 Illustrative Example 62
III.2.1.1 Product recipe 62
III.2.1.2 Plant topology 63
III.2.1.3 Market 64
III.2.1.4 Combined Heat and Power (CHP) based site Utility System 64
III.2.2 Recipe in an Industrial Perspective 65
III.2.3 Recipe Network 66
III.2.4 State Task Network (STN) Framework 67
III.2.4.1 Semantic element of STN framework 67
III.2.4.2 Rules for constructing STN representation 68
III.2.4.3 STN representation of the illustrative example 71
III.2.4.4 Mathematical modeling using STN framework 73
III.2.4.5 Limitations of STN framework 77
III.2.5 Resource Task Network (RTN) Framework 78
III.2.5.1 Rules for constructing RTN representation 78
III.2.5.2 RTN representation of illustrative example 81
III.2.5.3 Mathematical modeling of RTN framework 83
III.2.5.4 Strengths of RTN Framework 86

III.3 Conclusion: Towards A New Framwork For Handling Utilities In Integrated Batch Production Scheduling 87

CHAPITRE IV : EXTENDED RESOURCE TASK NETWORK (ERTN) FRAMEWORK 91

IV.1 Specific Features Of Batch Industrial Unit 93
IV.1.1 Batch Plant and Site Utility System: Heterogeneous Production Modes 93
IV.1.2 Duality of Water Derivative Resources 94

IV.2 Semantic Elements Of ERTN Representation 94
IV.2.1 ERTN Task Node: Notion of Delivery Time (dd_k) 95
IV.2.2 ERTN Resource Nodes 96
IV.2.2.1 Cumulative resource node 96
IV.2.2.2 Disjunctive resource node 96
IV.2.3 ERTN Arcs: Flow Arcs, Disjunctive, Cumulative and Precedence Arcs 96
IV.2.3.1 Material flow arcs 96
IV.2.3.2 Disjunctive resource arc 97
IV.2.3.3 Utility arc 97
IV.2.3.4 Restart precedence arc 98

IV.3 Rules For Constructing ERTN Representation 100

IV.4 Mathematical Model Of ERTN Framework 103
IV.4.1 Allocation Constraints: Disjunctive Resource Arc 103
IV.4.2 Capacity Constraint 105
IV.4.2.1 Storage through cumulative resource node 105
IV.4.2.2 Processing equipment through task node 106
IV.4.3 Cumulative Resource Mass Balance 106
IV.4.4 Task Mass Balances 107
IV.4.5 Consumption/Production of Utility Resource 109
IV.4.5.1 Consumption of utility resource 109
IV.4.5.2 Production of utility resource 109
IV.4.6 Modeling of Multimode Equipment 110
IV.4.7 Synthesis: Recapitulative Table of Equations and Input Data of ERTN Framework 111

IV.5 ERTN Representation Of Illustrative Example 114

IV.6 Conclusion 116

CHAPITRE V : COMPARISON OF SEQUENTIAL & INTEGRATED APPROACHES: APPLICATION OF ERTN FRAMEWORK 117

V.1 Presentation Of Two Management Philosophies 119

V.2 Presentation Of The Examples 121
V.2.1 Production Plant 121
V.2.1.1 Example 1 121
V.2.1.2 Example 2 125
V.2.1.3 Example 3 126
V.2.1.4 Comparison of the three examples 127
V.2.2 CHP Plant 127
V.2.2.1 General functioning 127
V.2.2.2 Boiler operations 129

V.3 Process For Comparing Sequential And Integrated Approaches 135
V.3.1 Input Data 135
V.3.1.1 Scheduling horizon 135
V.3.1.2 Finished product demand 135
V.3.2 Sequential vs. Integrated Approach 136
V.3.2.1 Sequential approach 136
V.3.2.2 Integrated approach 138

V.3.3 Comparison Criteria....138
V.3.3.1 Energy costs and emissions....138
V.3.3.2 Optimal use of cogeneration....138
V.3.3.3 Convergence history....139
V.3.4 Relevance of Comparison Criteria....140

V.4 Computer Application Developed....140
V.4.1 Solving The Scheduling Problem....140
V.4.2 Gantt Chart: A Computer Application For Analysis Of The Results....141

V.5 Results....144
V.5.1 Overall Energy Cost and Emissions....145
V.5.2 Utility Flow Ratios....147
V.5.3 Steam Curves....150
V.5.4 Gantt Chart....151
V.5.5 Convergence History....152
V.5.6 Decision Consistency....154

V.6 Conclusion....158

GENERAL CONCLUSIONS AND RECOMMENDATIONS....161

RESUME DE LA THESE EN FRANCAIS (THESIS SUMMARY IN FRENCH)....167

APPENDIXES....187
Appendix A....189
Appendix B....193
Appendix C....209

NOMENCLATURE....217

BIBLIOGRAPHY....221

LIST OF FIGURES

Figure I.1: Simplified representation of supply chain management (adapted from [Lambert & Cooper, 2000]) 7
Figure I.2: Energy supply chain 8
Figure I.3: Percentage fuel share of world total primary energy supply in 2004 (source: [EIA, 2007]) 9
Figure I.4: Total global market energy consumption by source in 2004 and projected for 2030 10
Figure I.5: Sectorial trends in the world [Price et. al, 2006] 11
Figure I.6: Centralized utility supply structure 15
Figure I.7: The onion model of process design. (Source: Smith [2005]) 18
Figure II.1: An industrial unit comprising of Production plant, Heat recovery network and Site utility system 26
Figure II.2: Depiction of Energy Bandwidth [JVP Int. & Psage Research, 2004 28
Figure II.3: Grassmann diagram depicting loss of exergy in a stream flow 29
Figure II.4: Histograms representing exergy efficiency and potential for improvement 30
Figure II.5: Most frequently technologies in Process Intensification [Stankiewicz & Moulin, 2000]. 32
Figure II.6: Basic heat recovery principle 33
Figure II.7: Heat exchange between streams and pinch point 34
Figure II.8: Trade off made between heat exchanger size and utility import costs 35
Figure II.9: Targeting through the use of Composite curves 36
Figure II.10: Heat exhchangers placed in the same enthalpy interval 36
Figure II.11: A grid representation of the Heat Exchanger Network (HEN) 37
Figure II.12: Time Slice Model (TSM) for simple batch process 39
Figure II.13 : Future Distributed Generation based utility supply structure [Fieldstone enterprise, website] 41
Figure II.14 : Energy effencies of CHP vs. conventional utility systems 41
Figure II.15 : Classification of the literature review of site utility system 46
Figure II.16: Traditional sequential approach 48
Figure II.17: Gantt charts for streams: (a) initial schedule, (b) rescheduling 49
Figure II.18: Integrated scheduling of production plant and site utility system 51
Figure III.1: Multi-product and multi-purpose batch plant structures (Barbosa-Povoa [2007]) 56
Figure III.2: Discrete and continuous time representation 58
Figure III.3: Event based continuous time approach 59
Figure III.4: Performance based objectives 60
Figure III.5: Separation of impure P2 into pure P2 and B 62
Figure III.6: Plant topology 63
Figure III.7: Typical CHP based site Utility System 64
Figure III.8: Functioning of a multistage turbine 65
Figure III.9: Hierarchical structure of recipe 66

Figure III.10: Recipe Network of illustrative example 67
Figure III.11: Two different STN from the same Recipe Network 68
Figure III.12: Single or multiple input(s) and output(s) of a task 69
Figure III.13: Priori known proportion of inputs and outputs based on batchsize 69
Figure III.14: The sum of all stream proportion entering and leaving a task is always 100% respectively 70
Figure III.15: Only streams of same quality can enter into state node 70
Figure III.16 : STN of each plant of the illustrative example 72
Figure III.17 : Decision and state variables 73
Figure III.18 : Measuring state variables at beginning of the time period 76
Figure III.19 : Missing semantic elements in STN representation 78
Figure III.20: RTN representation of a chemical reaction 79
Figure III.21: Duplication of task in case of identical equipments 80
Figure III.22: Task sharing not allowed among the processing equipment 80
Figure III.23: Simplification of the RTN representation by placing identical tasks next to each other 81
Figure III.24: Simplification of the RTN representation with the use of flags 81
Figure III.25: RTN representation of the illustrative example 82
Figure III.26: RTN representation and other schematics of the example under consideration 84
Figure III.27: Evolution of resource balance (note figure not drawn to scale) 85
Figure III.28: Consequence of assuming utility as a renewable resource 87
Figure III.29: Utility considered in aggregate or refine manner 88
Figure III.30: Slack time in RTN framework 89
Figure IV.1: Simple example demonstrating heterogeneity of production mode in total processing sites 93
Figure IV.2: Breakdown of resources 94
Figure IV.3: Representation of a task node in the ERTN framework 95
Figure IV.4: Notion of delivery time in ERTN framework 95
Figure IV.5: Representation of resource nodes in the ERTN framework 96
Figure IV.6: Representation of the material fixed and free flow arcs in the ERTN framework 96
Figure IV.7: Representation of the disjunctive resource arc in the ERTN framework 97
Figure IV.8: Representation of the utility arc in the ERTN framework 97
Figure IV.9: ERTN representation of the example developed in section IV.1.1. 98
Figure IV.10: Representation of the restart precedence arc in the ERTN framework 98
Figure IV.11: Water derivative resources as material resources 100
Figure IV.12: Use of material free flow arc to represent production of material resources in unknown proportions 101
Figure IV.13: Use of utility arc 102
Figure IV.14: Water derivative resources simultaneously acting as material resource and cumulative resource 102
Figure IV.15: Importance of restart precedence task 103
Figure IV.16: Allocation constraints linked to mathematical formulation using disjunctive arcs 104
Figure IV.17: Allocation constraints for mono-task processing equipment 104
Figure IV.18: A multi-tasking disjunctive resource 105
Figure IV.19: Allocation constraints for multi-task processing equipment 105
Figure IV.20: Mass balances around a resource node 106
Figure IV.21: Mass balances around task node 107
Figure IV.22: Utility resource consumed by processing task 109

Figure IV.23: Utility resource produced by processing task 109
Figure IV.24: Necessity for using two separate arcs: material resource arc and utility arc 110
Figure IV.25: Restart precedence task 110
Figure IV.26: ERTN representation of the illustrative example 115
Figure V.1: Master / Slave Management Philosophy based on sequential problem resolution 119
Figure V.2: Integrated Management Philosophy for unified joint scheduling 120
Figure V.3: STN representation of the product recipe 122
Figure V.4: Plant topology for example 1 122
Figure V.5: ERTN representation of production plant for example 1 124
Figure V.6: ERTN representation of production plant for example 2 125
Figure V.7: ERTN representation of production plant for example 3 126
Figure V.8: STN representation of the CHP plant 128
Figure V.9: CHP based site utility system 128
Figure V.10: Efficiency as a function of boiler load factor 130
Figure V.11: Fuel consumption as a function of HP steam generated in boiler 130
Figure V.12: Equivalence of piecewise linear approximation in form of ERTN representation 131
Figure V.13: Determining the fixed and variable coefficients of cumulative utility arc for boiler tasks 131
Figure V.14: ERTN representation of CHP plant 132
Figure V.15: Elaborated ERTN representation of the boiler task 133
Figure V.16: Detail about boiler emissions and their calculations 134
Figure V.17: Comparison of the sequential and integrated approaches 135
Figure V.18: Scheduling horizon and finished product demand pattern 136
Figure V.19: Explanation for using the summation term while calculating utility consumption 137
Figure V.20: Schematics of CHP based site utility system 139
Figure V.21: Solving procedure for sequential and integrated approaches 140
Figure V.22: Computer application "GanttChart" based on VC++ based interface 141
Figure V.23: Joint scheduling Gantt chart for production plant and site utility system 142
Figure V.24: Analysis of the scheduling problem in greater detail using window "Data Synthesis" 142
Figure V.25: Information provided by "Task" tab 143
Figure V.26: Information provided by "Storage" tab 143
Figure V.27: Information provided by "Batchsize" tab 143
Figure V.28: Information provided by "Power plant" tab 144
Figure V.29: Information provided by "Utility flows" tab 144
Figure V.30: Overall energy costs 145
Figure V.31: Overall GHG and SO_x emissions 146
Figure V.32: Flow ratios for example 1 and 2 148
Figure V.33: Flow ratios for example 3 and average flow ratios for all examples 149
Figure V.34: Steam curves for production plant in example 2 operating at 90% load ratio 150
Figure V.35: Task scheduling of production plant operating at 60% capacity 151
Figure V.36: Evolution of iteration for example 3 154
Figure V.37: Sequential approach production plant Gantt diagram and steam curves of utility system 156
Figure V.38: Integrated approach production plant Gantt diagram and steam curves of utility system 157
Figure GCR.1: Future extension of ERTN framework 163

LIST OF TABLES

Table I.1 : World total marketed energy consumption by region and fuel, 1990-2030 (quadrillion BTU) 10
Table I.2: Industry ranking based on energy usage [Energetics Inc et al., 2004]..... 12
Table I.3: Fraction of total energy demand met by fuel type in 2004: comparison of residential, commercial, industrial and transportation end uses (source: Environmental Information Agency [EIA, 2007b])..17
Table II.1: Energy saving estimates resulting from Process Intensification 31
Table II.2: Basic types of stream in batch processes 38
Table II.3: The technologies used by site utility system 42
Table III.1: Definition of batch process scheduling problem 56
Table III.2: Semantic elements of STN framework 68
Table III.3: Semantic elements of RTN framework 78
Table III.4: Matrix values for $\Phi_{k,r,t'}$.....85
Table III.5: Matrix values for $v_{k,r,t'}$.....85
Table IV.1: Semantics of ERTN framework 99
Table IV.3: Possible values for allocation binary variable 111
Table IV.3: Possible numeric values of $W_{k',t}$ and $W_{k'',t}$ 111
Table IV.4: Recapitulative table of semantic elements and corresponding equations of ERTN framework 112
Table IV.5: Data required for developing ERTN representation 113
Table V.1 : Resource allocation matrix for example 1 123
Table V.2 : Utility consumption matrix ($Cop_{u,k}$) for example 1 123
Table V.3 : Comparison of three examples 127
Table V.4 : Resource allocation matrix for CHP plant 129
Table V.5 : Fixed and variable coefficients for utility arc 134
Table V.6 : Description of utility flow ratios 139
Table V.7 : Convergence history of example 1 152
Table V.8 : Convergence history of example 2 153
Table V.9 : Convergence history of example 3 153
Table V.10 : Utility consumption matrix ($Cop_{u,k}$) 154
Table V.11 : Overall energy costs 155
Table V.12 : Incorporating full emission externality cost for example 3 functioning at 60% capacity 158

INTRODUCTION

The outlook on energy utilization has gone through a drastic change during the last few decades. Nowadays, there is far greater contemplation on provisioning and consumption of energy. This reflection has been brought about by a number of factors such as dwindling reserves of conventional sources of energy, fluctuating energy prices, unavailability of alternative sources of energy and new ecological realities about climate change. The search is on for finding alternative sources of energy that will replace fossil fuels as the primary source of energy. The goal is to find an energy source that is not only environmentally friendly but economically viable and sociably acceptable. However, for the foreseeable future, fossil fuels will remain the main source of energy. Therefore, it is of paramount importance to devise methodologies for more rational use of energy in all walks of human life.

Recently in France, the conclusion drawn by the Working Group, "*Lutter contre les changements climatiques et maîtriser l'énergie"* (Fight against climate change and control of energy), gathered at the recent Grenelle de l'environnement [2009] is that, "beyond the specific actions to improve energy efficiency in Building and Transport sector, there is a source of savings in other sectors which represent 43% of total energy consumption". In regards to the industrial sector (which accounts for 21 % of final energy consumption and 20% of emissions of greenhouse gases), the working group recognized that significant efforts had already been made in this sector but pointed out that further progress was still required.

The mode of production and management of utilities provide a great potential source for energy savings in the industrial sector as a whole and in the process industry in particular. In this regard, the Working Group [Grenelle de l'environnement, 2009] concluded that "approximately one third of the energy consumption of industrial (or final energy 11Mtep) comes from processes called *"utility"* (steam, hot air, heaters, electricity, etc.). The margins for improving the effectiveness of these processes exist. The dissemination and implementation of best practices can save up to 2 Mtep without requiring technological breakthroughs." In other words, one of the mechanisms identified by the Working Group to reduce energy consumption and emissions of greenhouse gases is **"the establishment of more efficient means of using process utilities"** within production units.

The development of decentralized utility system near or on the domicile of the consumer can be considered as the first response in his direction, which would lead to improvement in overall energy efficiencies. Moreover, there is a greater willingness among companies to come together and form a network for more efficient use of utilities. For example, five biggest companies located in the same region in Denmark embarked upon an "industrial symbiosis" project. [CADDET, 1999]. They built a network to allow for exchanging energy flows which resulted in significant reduction in overall energy consumptions. This concept is aligned with the notion of "eco-industrial parks" [Gibbs and Deutz, 2007].

However, generally in the industrial environment the importance is given to improving output productivity. The objective of energy efficiency and lowering harmful gas emissions is generally placed on the back burner. The biggest stumbling block for industrial units simultaneously seeking to achieve higher productivity and energy efficiency are the lack of tools and methodologies which would aid during he real world environment.

In this context, the objective of project *('Gestion Intégrée Multisite de l'Energie et de la Production'),* funded by CNRS , was to look for ways of improving energy efficiency and productivity of the industrial unit at the same time. The main aim of the project was to propose a generic and systematic methodology, which would allow better management of utility flows not only within an industrial site but also in a multiple site network.

The focus of this thesis is on single-site component and in particular, an industrial unit composed of a batch production plant and Combined Heat and Power (CHP) based site utility system. The CHP plants are a popular choice for site utility system as they simultaneously generate electricity and other forms of useful thermal energy (steam and hot water).

Traditionally, the management of such type of industrial units is carried out using sequential three step approach: scheduling of the production plant, estimation of the utility needs of manufacturing unit and finally scheduling of the CHP based utility system. However, in this kind of approach, all the focus is placed on the production plant and the utility system is treated as its subsidiary. To improve the decision-making process, this study proposes an integrated approach which addresses this imbalance by carrying out simultaneous scheduling of production plant and site utility system.

This dissertation is divided into five chapters:

The first chapter defines the general context for this research. First of all, the concept of energy supply chain is invoked to substantiate complexity of the "resource" energy over the other traditional resources like raw materials and finished products. Subsequently, the evolution of energy issue is discussed in detail with the special emphasis placed on the industrial sector. A classification of industries on basis of energy consumption is provided and the centralized structure of energy supply to industrial sector is briefly explained. Afterwards it is ascertained that developing methodologies for rational use of energy is just as important as looking for alternate sources of energy. The chapter ends with the laying down the objective of the study.

A batch industrial unit, also called "total processing system", comprises of three distinct components: a production plant, a heat exchanger network (HEN) and a site utility system. The second chapter presents a review of the various methods and techniques adopted to optimize each of each of these three components. Then, the role of scheduling in management of such industrial units is presented. The traditional sequential approach used for scheduling is presented and the need for integrated approach is stressed. It is highlighted that while efforts have been made to incorporate heat integration into production plant scheduling, the aspect of site utility system is largely ignored. Finally, the end of chapter emphasize on the necessity of coupling production plant and site utility system together in an integrated scheduling model.

Following a brief perspective on the batch process scheduling problem, the first part of chapter three analyses the various key components and methodologies involved in batch process scheduling problem. It is established that the aim of a general scheduling framework is two fold: firstly, develop a graphical presentation of the production process and secondly, based on the graphical presentation build up a generic mathematical formulation to determine the production scheduling. Subsequently, the existing frameworks used for modeling batch scheduling problem are discussed in detail with the help of a simple illustrative

example. The analysis demonstrates that the existing frameworks are not capable of handling nuances accompanying the generation and consumption of utilities. And conclude to the necessity for developing a new framework to perform integrated scheduling of production and site utility system.

The new framework called Extended Resource Task Network (ERTN) required to address the weaknesses in the existing frameworks is developed in chapter four. The ERTN framework introduces new semantic elements to the predecessor Resource Task Network (RTN) which allows for better handling of specificities related to utilities. The special feature of the ERTN framework is that each semantic element corresponds to a set of mathematical constraints, which allows the framework to be applied to any type of production plant and site utility system.

In chapter five, the Extended Resource Task Network (ERTN) framework is applied to undertake scheduling of three different production plants. The effectiveness of the ERTN based integrated approach is established by performing a comparison with the traditional sequential approach. This involves development of computer application using software XPRESS-MP to respectively model the sequential and integrated approaches. The two approaches are compared using variety of criteria and results are provided at the end of the chapter.

CHAPTER I

GENERAL CONTEXT OF THE STUDY

SUMMARY

This introductory chapter aims towards defining the framework for this research. The first section invokes the concept of energy supply chain to highlight the complexity associated with treatment of primary energy and utilities. Subsequently the second section presents the recent evolution of the energy context; the global energy consumption statistics are presented and it is established that fossil fuel will remain the primary sources of energy in immediate future. A more detailed energy consumption analysis in the industrial perspective and its impact on the environment is finally undertaken.

The third section looks at the possible solutions to energy issue in industrial perspective. It is highlighted that along with looking for renewable energy sources, a more rational utilization of energy should be promoted.

On the basis of above discussion, the last section lays down the scope of this study which will mainly focus on short term solution for batch and semi continuous processes.

RESUME

Ce chapitre introductif vise à définir le contexte dans lequel s'inscrit cette étude. La première section introduit le concept de chaîne logistique énergétique pour mettre en évidence la complexité associée au traitement des énergies primaires et des utilités. Par la suite, la deuxième section décrit les récentes évolutions du contexte énergétique ; ainsi sur la base des statistiques relatives à la consommation énergétique globale, il est démontré que les combustibles fossiles vont demeurer la principale source d'énergie primaire dans un futur immédiat. Une analyse plus fine de la consommation énergétique du secteur industriel et de son impact sur l'environnement est enfin présentée.

La troisième section présente un rapide tour d'horizon des solutions visant à remédier à l'épuisement imminent des ressources ; Parallèlement à la recherche de sources d'énergie alternatives, l'amélioration de l'efficacité énergétique est donc présentée comme la solution court terme la plus opportune.

Finalement, à partir de tous ces éléments, le cadre dans lequel se situe ce travail est rappelé et les objectifs de notre étude sont définis dans la dernière section.

I.1 THE ENERGY SUPPLY CHAIN

Energy is an essential resource for all domestic, commercial and industrial activities. Energy in many respects is similar to the traditional resources (such as raw materials) that need to undergo successive transformation processes to become available in its final useful form. However, there are certain characteristics that are specific to the resource "energy". Firstly, the resource energy is a more versatile resource and can exist in many different forms (heating, lighting, power, etc). Secondly, unlike traditional material resources the resource energy in its final useful form can not be stored. The impact of this constraint can be explained by invoking the notion of "Energy Supply Chain".

The idea of the energy supply chain is inspired from the traditional supply chain management concept. The *supply chain* is a network of facilities that perform the function of procurement of materials, transformation of these materials into intermediate and finished products, and distribution of these finished products to customers [Ganeshan & Harison, 1995]. A very simplified version of the supply chain [Lambert & Cooper, 2000] is shown in figure I.1, which demonstrates a network formed by linking together the raw material suppliers, manufacturers, retailers and customers. By sharing information and resources, all participants in supply chain reduce their operational costs ultimately leading to reduced product cost.

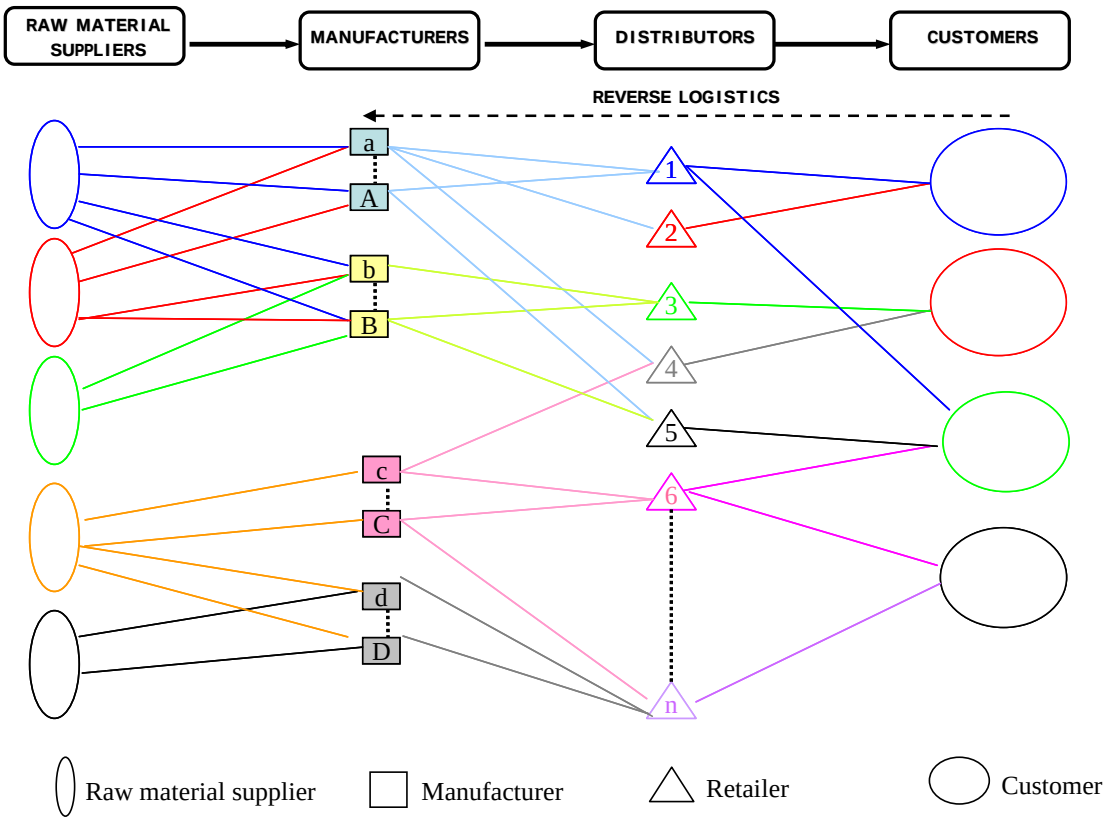

Figure I.1: Simplified representation of supply chain management (adapted from [Lambert & Cooper, 2000])

In the same vein the energy supply chain (shown in figure I.2) can be envisioned for improving the overall energy efficiency. The proposed energy supply chain shares many common characteristics with the traditional supply chain. Both supply chains have similar structures, perform successive transformation processes to convert raw materials into useful finished products and share the notion of reverse logistics in which customer returns or resells part or entirety of finished product back to the distributors and

manufacturers. However, there are two distinct characteristics of energy supply chain that distinguishes it from its counterpart traditional supply chain.

Firstly, the traditional supply chain supplies the finished product to the customer. Energy supply chain on the other hand, supplies intermediate products (electricity, hot water, steam and hydrogen) to the customer. Hence the final transformation step which converts the intermediate products into the useful finished product (mechanical work, lighting, heating, etc) is performed at customer's domicile.

Secondly, the energy supply chain has no notion of inventory: neither work in process inventory nor finished product inventory. The transformation process in the energy supply chain that converts primary energy sources (raw materials) into utilities (intermediate products) and useful energy (finished products) is instantaneous. Therefore unlike the traditional supply chain where large inventories of finished products are maintained, the energy supply chain must distribute utilities from the manufacturers to the customers without any storage. In case distributor is not able to find a customer the utilities generated are simply wasted. In the same manner the customer also has to immediately convert utilities into useful form of energy or otherwise the utilities supplied by the distributor get wasted.

Moreover, the various customers in energy supply chain can combine together and create a network that permits them to improve the overall energy efficiencies.

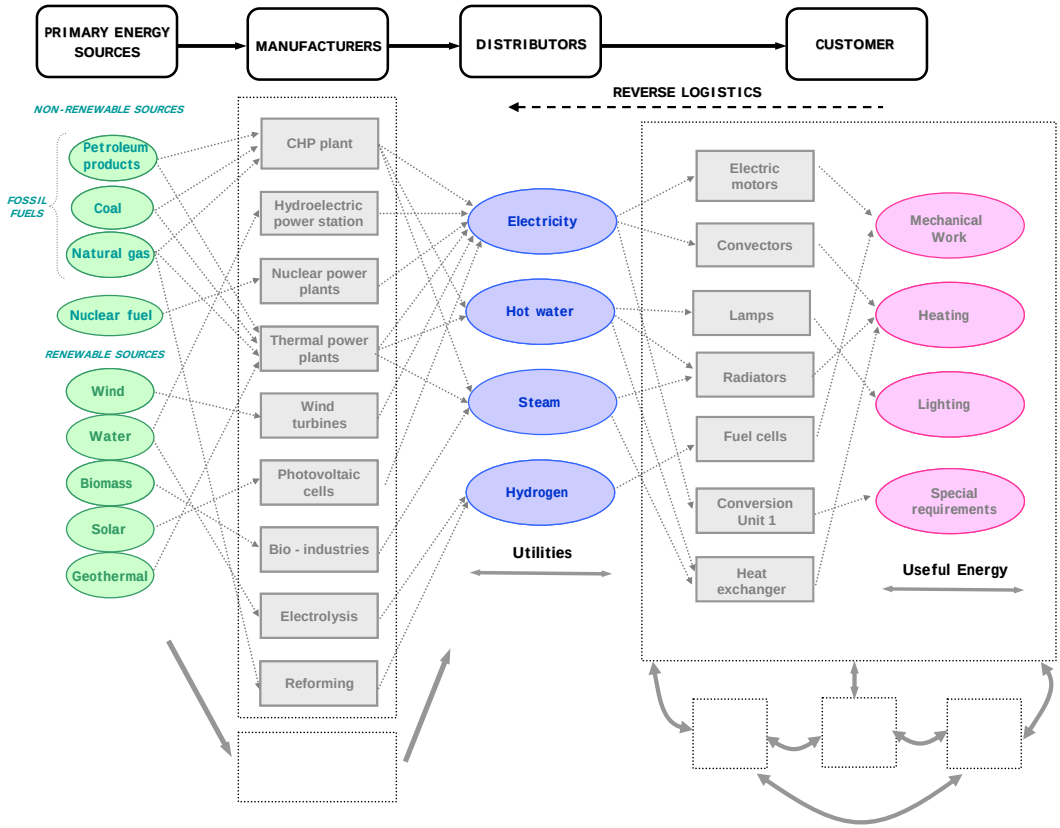

Figure I.2: Energy supply chain

The above discussion demonstrates that energy is a very complex resource and has nuances that are not found in traditional resources like raw materials and processing equipments.

I.2 EVOLUTION OF ENERGY CONTEXT

During the last few decades, the reduction in reserves of fossil fuels, unavailability of alternative sources of energy and new ecological realities about climate change have brought the issue of energy utilization to the forefront.

The energy problem is further compounded by an ever increasing demand for energy caused by population growth and economic development [EIA, 2007]. The largest increase in energy demand is projected to take place in developing countries where the proportion of global energy consumption is expected to increase from 46 to 58 percent between 2004 and 2030, an average annual growth rate of 3 percent. On the other hand, during the same period, the industrialized nations will witness lower energy demand of 0.9 percent per annum.

I.2.1 Dramatic Rise of the Global Energy Consumption

Ever since replacing less efficient sources, like water-driven mills and burning of timber, fossil fuels (oil, coal and gas) have become the primary energy source. Currently, the renewable sources account for just over 14 % of global energy demands while the rest are met by non-renewable sources, especially fossil fuels (figure I.3). Renewable energy is derived from sources that can be renewed indefinitely or can be sustainably produced. 11 percent of the renewable come from combustible renewable and renewable municipal waste (called bio fuels). The remainder of renewable energy comes from hydral, geothermal, solar, wind and tidal waves.

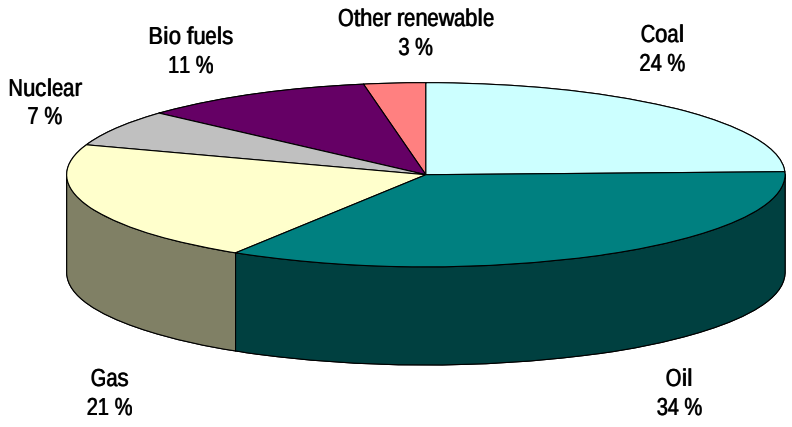

Figure I.3: Percentage fuel share of world total primary energy supply in 2004 (source: [EIA, 2007])

The projections of Energy Information Administration (EIA) show that in our immediate future, fossil fuels will continue to remain the main primary sources of energy, providing the bulk of energy as compared to nuclear and other sources (Table I.1 & Figure I.4).

Table I.1 : World total marketed energy consumption by region and fuel, 1990-2030 (quadrillion BTU)

Region	Year					% Annual Growth from 2004 – 2030
	1990	2004	2010	2020	2030	
OECD North America	100.8	120.9	130.3	145.1	161.6	1.1
OECD Europe	69.9	81.1	84.1	86.1	89.2	0.4
OECD Asia	26.6	37.8	39.9	43.9	47.2	0.9
Non- OECDEurope & Eurasia	67.2	49.7	54.7	64.4	71.5	1.4
Non-OECD Asia	47.5	99.9	131	178.8	227.6	3.2
Near East	11.3	21.1	26.3	32.6	38.2	2.3
Africa	9.5	13.7	16.9	21.2	24.9	2.3
Central & South America	14.5	22.5	27.7	34.8	41.4	2.4
Total OECD	**197.4**	**239.8**	**254.4**	**275.1**	**298**	**0.8**
Total Non-OECD	**150**	**206.9**	**256.6**	**331.9**	**403.5**	**2.6**
Source						
Oil	136.2	168.2	183.9	210.6	238.9	1.4
Natural Gas	75.2	103.4	120.6	147	170.4	1.9
Coal	89.4	114.5	136.4	167.2	199.1	2.2
Nuclear	20.4	27.5	29.8	35.7	39.7	1.4
Other	26.2	33.2	40.4	46.5	53.5	1.9
Total WORLD	**347.3**	**446.7**	**511.1**	**607**	**701.6**	**1.8**

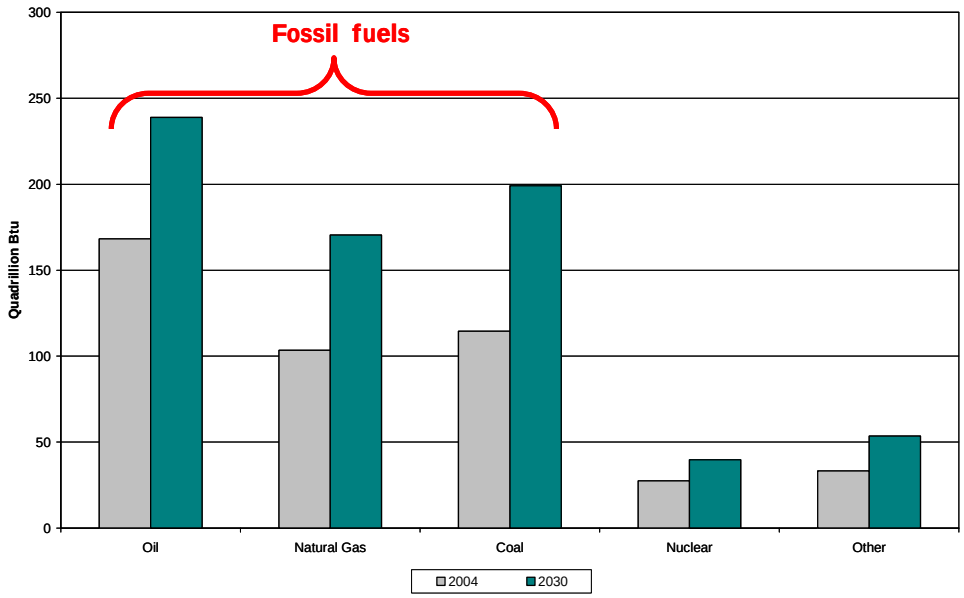

Figure I.4: Total global market energy consumption by source in 2004 and projected for 2030

I.2.2 The Case of the Industrial Sector

Energy consumption can be divided into four main sectors: transport, building (residential and commercial), agriculture and industrial. On the global scale, the industrial sector accounts for 36 percent of global energy consumption and even using conservative estimates [Price *et* al., 2006] this trend will remain more or less same in future.

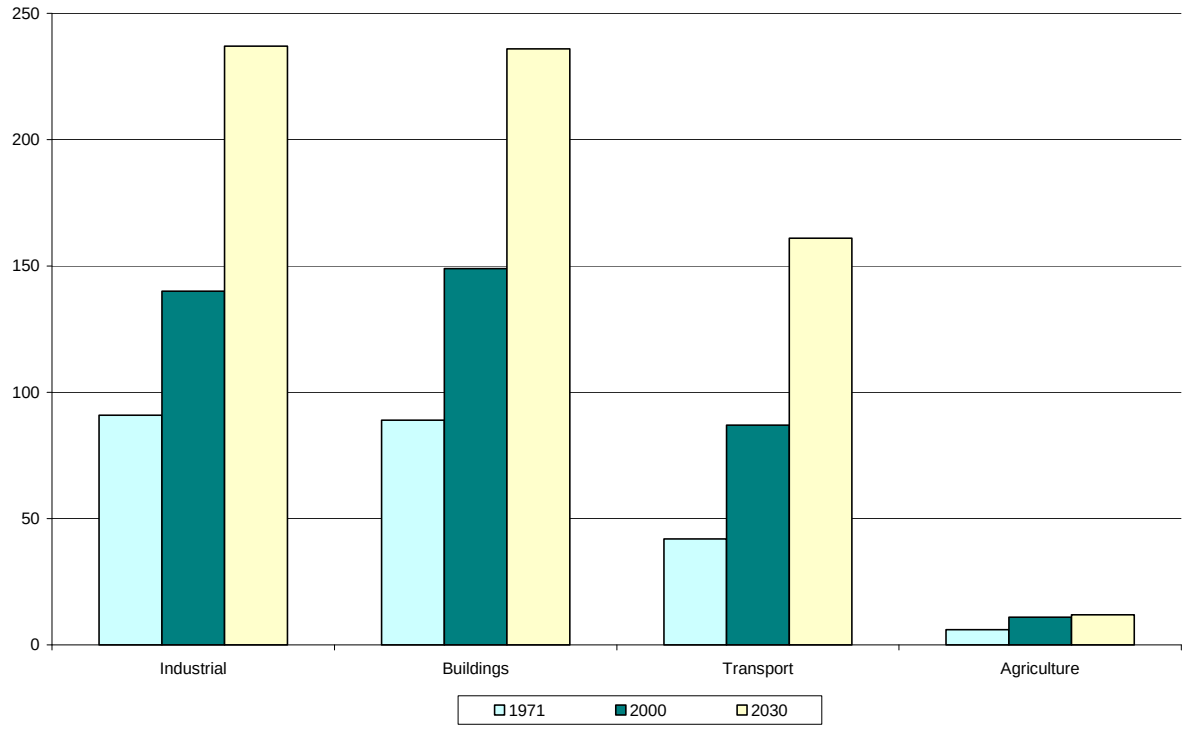

Figure I.5: Sectorial trends in the world [Price et. al, 2006]

I.2.2.1 Trends in industrial-sector energy consumption

The industrial sector can be broadly defined as consisting of:

- Energy-intensive industries, i.e. high consumers of energy: iron and steel, chemicals, petroleum refining, cement, aluminum, pulp and paper.
- Light industries, i.e. relatively low consumers of energy: food processing, textiles, wood products, printing and publishing, metal processing.

Energy-intensive industries account for more than half of the industrial sector's energy consumption in most countries. However, the overall industrial energy consumption in a specific country or region is dependent on two key factors: the type and magnitude of commodities produced and the rate of economic growth.

(a) Nature and magnitude of commodities produced

The nature and magnitude of commodity produced is the main defining feature in overall energy consumption. For example, during the last few decades in U.S, the energy consumption in industrial sector has seen relatively less increase as compared to building and transport sectors [EIA, 2007b]. This can primarily be attributed to the U.S. economy's overall shift from being based on manufacturing to being based in service and commerce. Moreover, within the U.S industrial sector, the focus has shifted from energy intensive industries towards light industries. On the contrary, the industrial sector in developing countries and especially China has become more oriented towards high energy intensive industries [Price & Xuejun, 2007].

(b) Economic growth

A direct correlation exists between the amount of economic growth in a region and the industrial energy consumption. The economic growth brings prosperity to a region which in turn improves the living standard of local people and allows for development of better infrastructure. This cycle feeds the production demand

of energy intensive commodities. This is exactly the scenario being played out at this moment of time in developing countries where the demand for products such as iron, steel, cement, etc is on the rise. On the contrary, in the industrialized countries the demand of these products is either on decline or at best stable. For example, between 1995 and 2005, steel production declined at an average annual rate of 0.3 percent in the United States, while growing at an annual rate of 1.0 percent in Japan and 14 percent in China [IAC, 2007].

For these reasons the industrial sector has experienced increased energy consumption. According to Price *et* al. [2006], the energy consumption in industrial sector showed an annual growth rate of 1.5 % (increasing from 89 EJ in 1971 to 142 EJ*) during the time period 1971-2002. During this period, annual energy consumption growth rate in developing countries was 4.5 % while that of developed countries was only 0.6 %.

I.2.2.2 Classification of industrial sector based on energy consumption

Activities such as extraction of natural resources, conversion of raw material into intermediate and finished products, fabrication and assembly of discrete products, etc all fall under the domain of industrial sector. It is not sufficient to classify such a diverse sector on basis on whether the industries are high or low energy consumers. Table I.2 presents a broader classification of the different industrial subsectors based on their energy consumption, type and magnitude of utility consumed, energy intensity and type of production process (continuous, discrete or batch) followed. Although this table only contains details about the industrial sector in USA [Energetics Inc *et* al., 2004], it is representative of industrial sector in all the developed countries in the world.

Table I.2: Industry ranking based on energy usage [Energetics Inc et *al., 2004]*

	Overall energy use		Electricity		Steam		Energy Intensity	Type of process
Sector	**TBtu**	**Rank**	**TBtu**	**Rank**	**TBtu**	**Rank**		
Chemicals	5074	1	733	1	1645	2	High	Continous / Batch
Forest Products	4039	2	491	2	2442	1	High	Continous
Petroleum Refining	3835	3	174	11	1061	3	High	Continous
Iron & Steel Mills	2056	4	181	9	96	7	High	Continous
Food & Beverage	1685	5	258	4	610	4	Low	Batch
Mining	1273	6	262	3	4	15	Low	Continous
Alumina & Aluminium	958	7	249	5	41	10	High	Continous
Transportation Equipment	902	8	198	6	112	6	High	Discrete
Fabricated Metlas	815	9	176	10	35	11	Low	Contnuous / Batch
Computers, Electronics	728	10	194	7	53	9	Low	Discrete / Batch
Plastic & Rubber	711	11	184	8	81	8	Low	Batch
Textiles	659	12	142	12	132	5	Low	Continous / Batch
Cement	446	13	41	16	1	16	High	Continous
Heavy Machinery	416	14	97	13	25	12	High	Discrete
Glass & Glass Products	372	15	54	15	5	14	Low	Continous
Foundries	369	16	63	14	22	13	Low	Continous

The chemical industry is clearly the greatest user of energy, followed by forest products and petroleum refining. Other principal large consumers include iron and steel mills, food and beverage, mining, aluminum, and transportation equipment manufacturers.

The top three industries share several characteristics that contribute to their high energy consumption.

* 1 EJ = 10^{18} J and is referred as exajoules.

- Firstly, in these industries, the core processes used to convert raw materials are characterized by operations performed at high temperatures and high pressures.
- Secondly, each of these industries consumes vast amounts of electricity as well as steam utility.
- Thirdly, due to the technological and thermodynamic limitations, the energy efficiency of several equipments in these processes is quite low. For example, distillation columns that are extensively used in the chemical and petroleum refining industries have poor energy efficiencies between 20 and 40% [Energetics Inc *et* al., 2004].

Table I.2 also shows that steam utility plays a pivotal role in many industries. Although four industries – forest products, chemicals, petroleum refining, and food and beverage – account for 87% of steam use in industry, other industries such as textiles, transportation equipment, iron and steel mills, and plastics and rubber products are also significant steam users. The purpose of steam use varies substantially from industry to industry and it generally depends on the nature of the process and location of industrial site. For example, while chemical industry uses steam mostly for fluid heating other industries may use steam for direct heating of parts or components, cleaning or for other process heating (e.g., sterilization) [Energetics Inc *et* al., 2004].

Industrial units even if they are located geographically close to one another are extremely diverse in their operations and utility demands. Generally all industrial units can be divided into three broad categories: discrete part manufacturing, continuous manufacturing and batch manufacturing.

Definition

- *Discrete part manufacturing creates an identifiable individual product through series of steps in an industrial unit. Automobile manufacturers, defense systems manufacturers, etc are example of discrete part manufacturers.*
- *Continuous manufacturing uses a process to yield a continuous input stream of raw materials into a stream of products. In such type of manufacturing, the process operations work in a continuous and uninterrupted manner without any breaks. Petroleum industry, steel industry, glass manufacturers, paper and pulp industry, etc are usually based on continuous manufacturing.*
- *Batch manufacturing there are neither individual products nor a stream of products. They can be characterized by:*
  - *Manufacturing of small batches of diversified products who share the same resources.*
  - *The processing operations performed successively in the same equipment or on the same batches.*
  - *The flow of input stream (raw materials) and output stream (products) is variable and discontinuous.*

Continuous manufacturing industries are more energy intensive (as demonstrated in table I.2) but many batch manufacturing industries also consume considerable amount of energy in form of electricity and steam. However, the nature of processes in continuous and batch manufacturing are totally contradictory. Continuous manufacturing industries are characterized by same process routings for all products, a divergent flow and a low added value. On the other hand, batch manufacturing is characterized by different product routings, a convergent material flow and a high added value. All this means that the priorities in the design and day to day operations differ significantly, depending on whether the industrial unit follows continuous or batch manufacturing.

In continuous manufacturing, the fundamental importance is given to the design of the industrial unit. Before the construction of the industrial unit, the design team formulates a number of plausible design options. Out of these, the design which is technically and economically most feasible is selected. The design

team lays out the blue print of the structure and inner working of the processes i.e., raw material compositions, flow rates, temperatures, etc. These blue prints are then followed to letter during the operational phase of the industrial unit to maximize energy efficiencies and reduce costs. In order to meet uncertainties some contingency planning is undertaken, which is applied in case of emergencies. For example, use of stand-by boilers to meet peak steam loads, spare machinery in case of breakdown, etc.

A batch manufacturing industrial unit follows the same design procedure. However, in batch manufacturing, there are additional constraints that are not present in the continuous manufacturing. The biggest and most important constraint is that of *time*, which invokes additional design and operational challenges. Due to this additional complexity, the aspect of production *planning* and *short-term scheduling* in batch manufacturing is of critical importance. No energy optimization can be achieved without optimizing the scheduling aspect of batch manufacturing.

I.2.2.3 Energy supply to the industrial unit: a centralized system

In most cases energy, is supplied to the industrial and building (residential and commercial) sectors in form of *utilities*. Both sectors have an intrinsic need for electricity and ambient water but their requirements for other type of utilities are quite different. In the building sector, the only other utility normally required is hot water for heating purposes. On the other hand in industrial sector, based on the nature of industrial activity, there is a much more diverse demand of utilities, for example, steam (at different pressures), hot/cold water, hot/cold air, etc.

Traditionally, the utility supplier market has been highly regulated and under strict government control. But over the last few decades, the deregulation in energy sector has not only given the utility suppliers the opportunity to increase their market share but it has also allowed the customers to pick and choose their utility suppliers. Consequently, many aspects of the utility suppliers are changing, including its infrastructure. However, in spite of this increased competition and diversity of choice, the prices of utilities (e.g., electricity & district heating) have been rising continuously. This is primarily due to increased cost of fossil fuel and lack of alternative sources of energy [IEA, 2000].

The traditional utility supply structure, both electric power and district heat, is organized around large centralized units [EIA, 2000]. These centralized units are located at considerable distances from the point of demand (customers). Hence, the centralized units develop extensive networks for transmission and distribution of these utilities. As illustrated by the figure I.6, the whole supply structure of the centralized units consists of three functions: generation, transmission and distribution.

(a) Electricity Supply Structure

The centralized electric supply structure is extremely complicated [El-Hawary *et* al., 1993]. However, all centralized electric supply units share the common fundamental characteristics of generation, transmission and distribution [Momoh, 2001]. For generation of electricity, the centralized units use variety of prime movers and primary energy sources. The prime movers are engines, turbines, water wheels, or similar machines that drive an electric generator. As remarked previously, the primary energy sources can either be renewable or non-renewable but the majority of these centralized units are run on fossil fuels, nuclear fuel and hydral sources (dams). The rating of these plants lies in the range of several hundred MW's to a few GW's.

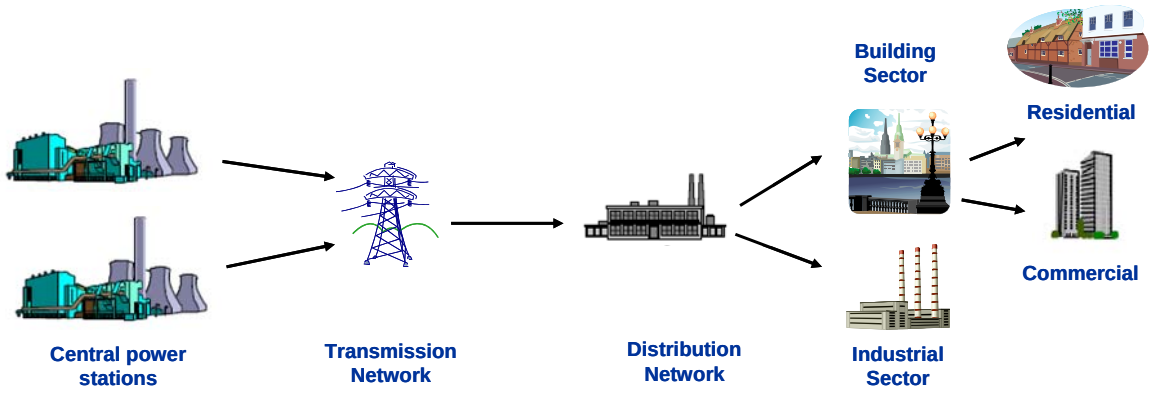

(a) Centralized Electricity Supply Structure

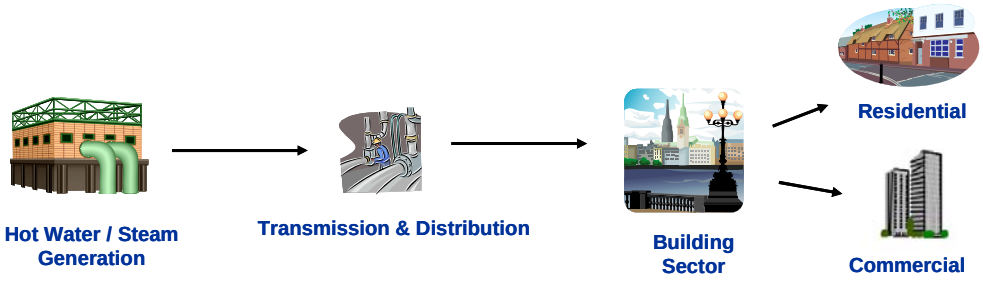

(b) Centralized Heat Supply Structure

Figure I.6: Centralized utility supply structure

After generation, electricity is transported over long distances from centralized units towards substations close to the ultimate consumer. Because of the resistance to conduction, some electrical power is lost during this transmission as dissipated heat. Therefore, high voltage overhead and underground conducting lines are used which require less surface area for a given carrying power capacity and result in less line loss. [EIA, 2000].

Distribution is the delivery of electric power from the transmission system to the end-use consumer. The distribution systems begin at the substations, where power transmitted on high voltage transmission lines is transformed to lower voltages for delivery over low voltage lines to the consumer sites. [EIA, 2000].

In the deregulated market, all three functions – generation, transmission and distribution are owned by different entities. An independent system operator (ISO) serves as the neutral operator and is responsible for maintaining instantaneous balance of electricity over the whole electric supply structure [Shahidehpour & Alomoush, 2001]. The generation company (regulated or non-regulated) operates and maintains the centralized electricity units. Transmission networks are shared by all the centralized electricity units and the distributors. Distributing companies are independent entities that provide the consumer with electricity and charge them for their services.

(b) Heat Supply Structure

Similar to the electric utility suppliers, district heat suppliers can use a variety of equipments and primary energy sources. However, the *heat only boiler stations* remain the biggest producers of district heat. Heat is generated in a centralized location and then transmitted for commercial and domestic heating requirements. District heating plants offer higher efficiencies and better pollution control than the localized boilers. The capacity of the district heaters is relatively limited as compared to that of centralized electricity generators.

However, the use of nuclear power plants for district heating can hugely increase their capacity. For example in Switzerland, the Beznau Nuclear Power Plant provides heat to about 20,000 people [Handl, 1997].

In comparison to electric utility suppliers the district heat suppliers are located closer to their ultimate customers. Hence, their transmission and distribution can be considered as a single function. The heat generated in the centralized location is distributed to consumer via a network of insulated pipes. The piping network consists of feed and return lines to the heat generation unit. To avoid the heat loss due to convection, the piping network is usually constructed underground. Water is preferred medium for heat distribution, but sometimes steam is used even though the use of steam leads to higher temperature losses and decreased overall energy efficiency.

Conventionally, the industrial sector is less reliant on supply of district heat and meets the heat demands using its own plant machinery like boilers, condensers, etc.

I.2.3 Impact on Environment

The reliance on fossil fuels as the primary source of energy has huge negative impact on the environment and eco-system of our planet. The studies of Intergovernmental Panel for Climate Change (IPCC) have acknowledged that the main cause for the phenomenon of global warming is the emission of green house gases, which are released in to the atmosphere during burning of fossil fuel. Global warming is considered to the biggest impediment in carrying out sustainable development. The Brundtland report defined sustainable development as the development that "meets the requirements present without compromising the ability of future generations to meet their own needs" [WCED, 1987].

According to Price *et* al. [2006], the total energy related carbon dioxide (CO_2) emissions in the industrial sector could grow at an annual rate of growth between 1.8 and 2.9%. The CO_2 emissions in the industrial sector are projected to continue increasing for all regions until 2010 when CO_2 emissions from the developed countries of the North America, Western Europe and Pacific OECD regions will peak and start declining. On the other hand, the CO_2 emission from the developing countries will surpass those of the developed regions in the industrial sector. In sectorial analysis, the projections show that the transport sector will experience the highest average annual growth rate in CO_2 emissions while the CO_2 emissions in industrial sector is projected to grow faster than the historic trends.

I.3 SOLUTION TO THE ENERGY ISSUE IN IDUSTRIAL PERSPECTIVE

The industrial sector is faced with multiple challenges. On one hand, the fossil fuel prices have shown radical fluctuations during the last few years with the crude oil price recording the highest ever price of $147.27 per barrel (on July 11, 2008). On the other hand, increased competition and shrinking profit margins are placing increased financial burdens for running sustainable businesses. In addition to this the environmental regulations, influenced by international treaties like Kyoto and European Emission Trading Scheme, are becoming increasingly stringent and hard to satisfy. In order to overcome these multiple challenges, industrial sector needs to:

- Look for ways of improving productivity and reducing operational costs.
- Satisfy environmental regulations.
- Build sound relationships with society.

In face of these challenges, the efficient utilization of energy has emerged as one of the major point of focus. To meet these challenges, the possible solutions to energy issue can be divided into two categories – long tem solutions and short to medium term solutions.

I.3.1 Long Term Solution: Finding Alternative for Energy Conversion

Nowadays, there is a concentrated effort in scientific world to find alternative sources of energy. Emphasis is on renewable energy like wind, solar, hydrogen, etc. To encourage further research into the alternative sources of energy, there is an increased pressure for enforcing pollution taxes and in particular carbon tax. Baranzani *et* al. [2000] presented the advantages of applying carbon tax while Painuly [2001] proposed the usefulness of green credits in encouraging the use of renewable sources.

However, it is also a reality that these alternative energy sources are not available in immediate future. Fossil fuels are not only the primary source of energy today (table I.3) but energy projections of Environmental Information Agency (table I.1) show that even in the year 2030, this situation is not going to change.

Table I.3: Fraction of total energy demand met by fuel type in 2004: comparison of residential, commercial, industrial and transportation end uses (source: Environmental Information Agency [EIA, 2007b])

Sector	Electricity	Coal	Coal Coke	Natural Gas	Petroleum	Renewable	TOTAL
Industrial	33.5 %	6.1 %	0.4 %	25.6 %	29.3 %	5%	100%
Commercial	76.2 %	0.6 %	0.0 %	18.2 %	4.3 %	0.8 %	100%
Residential	68.8 %	0.1 %	0.0%	23.6 %	7.3 %	2.3 %	100%
Transportation	0.3 %	0.0 %	0.0 %	2.2 %	96.5 %	1.0 %	100%

I.3.2 Short to Medium Term Solutions: Promoting a More Rational Use of Energy

Along with the finding alternative energy sources, effort must be made in the industrial sector to seek modus operandi that will act as short to medium term solutions and minimize the damage caused by the use fossil fuels. A possible solution in this regard is promoting a *more rational use of energy* or in other words, increasing the energy efficiency of industrial processes. This point will be extensively discussed in Chapter II.

I.3.3 Scientific Gaps

The mode of production and management of utilities provide a great potential source for energy savings in the industrial sector as a whole and in the process industry in particular. In this regard, the Working Group [Grenelle de l'environnement, 2009] concluded that "approximately one third of the energy consumption of industrial (or final energy 11Mtep) comes from processes called *"utility"* (steam, hot air, heaters, electricity, etc.). The margins for improving the effectiveness of these processes exist. The dissemination and implementation of best practices can save up to 2 Mtep without requiring technological breakthroughs." In other words, one of the mechanisms identified by the Working Group to reduce energy consumption and emissions of greenhouse gases is "the establishment of more efficient means of using process utilities" within production units.

One of the possible ways of making more efficient use of utilities is by using a cogeneration facility at/near the industrial production unit. A substantial number of industrial sites deploy a site utility system to meet their energy needs. However, in majority of these industrial sites, "production is the king" and site utility systems are regarded mainly as a support function whose objective is to provide service to the production unit. In spite of the fact that the activity level of the utility system is dependent on the demand of production unit, the energy considerations are rarely included during design and/or scheduling steps.

This inclination is a result of the traditional methodology adopted in design of an industrial process, which is based on sequential based hierarchy [Smith, 2005] that can be represented by the layers of an "onion

diagram" (figure I-7). At the heart of this hierarchy is the process design (reactor, separation and recycle system) while the energy considerations are the outer layers (heat recovery system, utilities, etc). Thus, naturally the emphasis is placed on the process design and the process energy requirements are taken into account a posteriori.

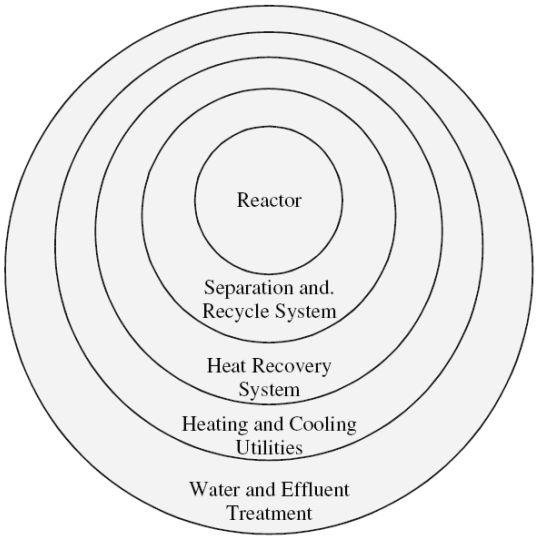

Figure I.7: The onion model of process design (Source: Smith [2005])

Nowadays, there is a consensus that there is a need to adopt an integrated approach that will replace the hierarchy model which relies on the flow of information from core of the onion to the outer layers. The integrated approach will allow for more simultaneous interactions between all layers of the onion. This concept is vitally important for the industrial sites that are composed of several interacting processes and where a site utility system is used to meet the energy requirements. The International Energy Agency (IEA) has defined this concept as *Process Integration*.

Definition

Process Integration is the, *"Systematic and general methods for designing integrated production systems, ranging from individual process total sites, with special emphasis on the efficient use of energy and reducing the environmental effects" [Gundersen, 2000].*

In the early 1990s, the process integration was synonymous with thermodynamic technique of pinch and energy analysis. But these days, process integration has evolved and now covers four key areas [Smith, 2000]:

- Efficient use of raw material
- Emission reduction
- Process operations
- Energy efficiency

In this regard, process integration makes significant use of mathematical programming and optimization techniques [Gundersen, 2000].

However, in spite of extensive research in this field, there is still lack of tools and modeling frameworks (in the form of computer softwares) that will allow to solve the process integration problems. This is especially true for the industrial units using site utility systems, which fail to fully incorporate the effect of energy integration with the production scheduling.

I.4 SCOPE OF THE STUDY

The previous sections have clearly illustrated that energy issue is becoming increasingly crucial for industrial sector that consumes large quantities of utilities. Although the scientific world should continue to look for alternate sources of energy, a short term solution would rather rely on a more rational use of energy. The present section summarizes the scope of this study:

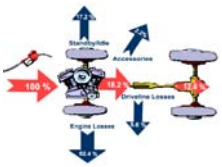

The objective of the study is to look for *short term solution* to energy issue. It is a reality that the new energy conversion processes will require at least a few decades to mature. Until then fossil fuels will remain the primary source of energy. In the immediate future, the industrial sector should strive to reduce energy consumption in order to minimize the impact of industrial activities on the environment.



In this thesis, only *batch and semi-continuous processes* industries are considered. Moreover, this study assumes that site utility systems use *Combined Heat and Power (CHP)* for generating the utilities. As mentioned in section I.2.2.2, the scheduling perspective of batch industries brings special complexity to the utility management problem.



In this context, one of the purpose of this thesis is to establish a state of the art review concerning the different solutions which would lead to a more rational use of energy at an industrial site. Three axes are developed: improving energy efficiency of the production plants, more systematic use of heat integration concept and development of a site utility system.

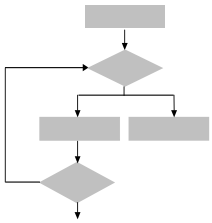

Then, this study tries to resolve this difficulty by developing an **integrated production and site utility system scheduling approach** that simultaneously undertakes short-term scheduling of a multipurpose batch plant and operational planning of utility system in a single universal model.

The proposed methodology which relies on discrete time modeling uses Mixed Integer Linear Programming (MILP). To permit an efficient and generic formulation of various kinds of industrial problems, a new integrated scheduling framework (inspired from the original STN and RTN frameworks), called **Extended Resource Task Network (ERTN) is also developed.**

CHAPTER II

TOWARDS MORE RATIONAL USE OF ENERGY: STATE OF ART

SUMMARY

This chapter presents a review of the various methods and techniques adopted for promoting a more rational use of energy in industrial units. The first section starts by highlighting the growing trend at governmental, institutional and industrial level to look for more energy efficient processes.

A batch industrial unit, also called "total processing system", comprises of three distinct components: a production plant, a heat exchanger network (HEN) that minimizes the need for external utilities by recovering process heat and a site utility system that provides the necessary utilities to various equipments in production plant. The second section presents a review of the various methods and techniques adopted to optimize each of these three components. This section then permits to show that the approach traditionally used in the industry for management and production scheduling of such industrial units is a sequential approach is adopted. However in the sequential resolution, all the emphasis is placed on the production plant.

Lately, some efforts have been made to integrate heat integration constraints directly into the scheduling problem but the operational planning aspect of site utility system is largely ignored. As a resultn the site utility operates at suboptimal levels which lead to higher energy costs. In this context, the third section finally insists on the necessity to integrate all the three components and more importantly look to couple the scheduling of production plant and site utility system in a universal scheduling model.

.

RESUME

L'objectif de ce chapitre est de présenter un état de l'art des méthodes et techniques existant pour promouvoir une utilisation plus rationnelle de l'énergie sur les sites industriels. La première section met tout d'abord en évidence les programmes émergents au niveau institutionnel ou gouvernemental ainsi que les initiatives industrielles visant à améliorer l'efficacité énergétique des procédés.

Un site industriel est en général constitué de trois composants : un atelier de production, un réseau d'échangeurs permettant de minimiser le besoin externe en utilités en favorisant les recyclages énergétique internes et un site de production d'utilités. La seconde section propose un état de l'art des techniques et méthodes exister pour optimiser chacun de ces trois composants. Cette section permet ensuite de montrer que l'approche traditionnellement utilisée dans l'industrie pour la gestion des sites industriels est une approche séquentielle qui traite successivement l'ordonnancement de l'atelier, la conception du réseau d'échangeur et la planification de la centrale de production d'utilités. Toutefois, cette approche peut se révéler inefficace et conduire à des solutions non optimales.

Dans ce contexte, la dernière section insiste finalement sur la nécessité d'intégrer les trois composants dans un unique modèle d'ordonnancement qui serait générique et applicable à n'importe quel site industriel pourvu qu'il opère en discontinu.

II.1 AN EMERGING THEME IN RESEARCH PROGRAMS

The more rational use of energy is not an exclusive prerogative of the industrial sector as there is vast potential for energy efficiency in the transport and building sector. However, there are two distinct characteristics of the industrial sector that make it more receptive to this concept:

- Firstly, the energy consumed by an average individual industrial unit is considerably more compared to its counterpart building unit or transportation vehicle. Thus, potential for energy driven-productivity gains are much higher in the industrial units.
- Secondly, energy use in industry is much more dependent on the operational practices than in the transport or building sector. The transport and building sector normally require a one time investment into energy efficient devices/components (like fuel efficient automobiles, heating insulations, electrical appliances, lightings, etc) and continues to enjoy benefit throughout the life of these devices, without any further intervention from the user. In complete contrast, as argued by McKane [2007], an industrial unit may change production volumes or schedules and/or the type of product manufactured many times during its life cycle. Thus, energy efficient industrial practices devised for the initial production scenario may not be efficient under subsequent production scenarios. The presence of individual energy efficient devices/components, while important, provides no assurance that the industrial unit as a whole will be energy efficient.

In this context, various initiatives have been started to improve the energy efficiency in the industrial units.

II.1.1 Government Programs

The U.S. Government has launched a number of initiatives for a more rational use of energy throughout various sectors. One of such program that is run co-jointly under the supervision of U.S. Environmental Protection Agency and the U.S. Department of Energy is ENERGY STAR [1]*. The objective of ENERGY STAR is to reduce costs and protect the environment through energy efficient products and practices. However, the program is more oriented towards the building sector.

For the industrial sector, the U.S. Department of Energy's Office of Energy Efficiency and Renewable Energy (EERE) coordinates Industrial Technologies Program (ITP). The ITP [2] allows for collaboration between U.S. Department of Energy and the industry to save energy and money, increase productivity, and reduce environmental impacts by:

- promoting R&D on new energy efficient technologies,
- supporting commercialization of emerging technologies,
- providing plants with access to proven technologies, energy assessments, software tools, and other resources,
- improving energy and carbon management in industry.

The American Recovery and Reinvestment Act of 2009 has allocated $16.8 billion for the various programs and initiatives launched by Office of Energy Efficiency and Renewable Energy's (EERE). The funding designated for the ITP is $256 million.

In Europe, many research projects have been initiated (such as JOULE, THERMIE and BRITE-EURAM since the beginning of the 1990s for more rational use of energy in industrial sector. Efthimeros and

* Indicates website refrences which are presented at the end of bibliography.

Tasahalis [2000] reviewed the IESTs (Intensified Energy Saving Technologies) that have resulted from the above mentioned programs. The focus of the IESTs has been on the following areas: heat transfer units, high temperature units, compressed gases, organic Rankine Cycles (ORCs), refrigeration cycles, heat pumps and heat transformers, cogeneration systems and other intensified units.

For example, the JOULE program concentrated on:

- Advanced unit operations, including process intensification*, energy efficient separation processes and the efficient use of electricity and processes combining the efficient use of water and energy.
- Systems engineering covering systems modeling and new process routes.
- Integrated projects in the field of industry, buildings and/or agriculture, covering integrated processes and large projects to be implemented on a European level.

Pilavachi [1998] summarize the objective of JOULE program as, '*to ensure that a maximum number of tangible and intangible results become available for the economic, technological and social benefits of industry and society by disseminating useful information in order to attract potential partners*'. He concluded that in the long term, *'an overall 30-50 % reduction in energy consumption might be achieved thanks to the development of new processes or process routes or by applying advanced concepts in the process industries'*.

II.1.2 Institutional Programs: CNRS

Encouraged by the growing importance of energy issue and financial funding offered by government many research organizations have launched programs to look for ways for more rational use of energy. CNRS (Centre National de la Recherche Scientifique) in France in early 2000 started an interdisciplinary energy [3] program whose objectives are:

- looking for medium and short term solutions for the energy issue so that the emission of harmful gases into the atmosphere can be reduced,
- and looking for long term solution that would be able to replace the fossil fusel are primary source of energy.

In this context, the CNRS interdisciplinary program has identified four research areas on which research and development (R&D) must be focused [Spinner & Fabre, 2003]:

1. Look into Hydrogen as a possible source of energy that would ultimately replace fossil fuels,
2. Devise methods that would allow for better control of energy consumption throughout the building sector,
3. Develop methods for reducing the emissions of CO_2 by using carbon capture and sequestriation, and biomass,
4. Look for ways for more efficient production, distribution and storage of electricity.

In this background, two projects: a one year long exploratory project in 2006 called PRIME (*Projet de Réseau d'Intégration Multisite de l'Énergie et de la Production*) and a two year long research project (from 2007 to 2009) called GIMEP (*Gestion Integree Multisite et Monosite de l'Énergie et Production*) were co-jointly managed by Laboratoire de Génie Chimique (LGC) and Laboratoire d'Analyse et d'Architecture des Systèmes (LAAS) [Thery et al. 2008a, 2008b]. The purpose of these projects was to improve the energy efficiency of industrial sites by finding:

- Mono-site solutions i.e. coupling production unit with the site utility systems,
- Multi-site solutions i.e. collaboration between enterprises located at different sites in order to have

* This concept will be extensively described in section II.2.2.2.

better management of energies

The results presented in this study have been obtained thanks to the financial support granted by the CNRS for both projects.

II.1.3 The Initiatives of the Industry

Historically, energy management methodologies adopted by various industries are synonymous to "fire fighting". The general tendency in the industrial sector is only to seek energy management solutions during time of "crisis" i.e., when energy is in short supply or energy prices are high. After the "crisis" period passes, the industries return to normal operation and energy management solutions are again relegated to peripheral role.

The ambivalent attitude of the industrial sector towards adapting energy management program has a variety of reasons. However, the two main reasons as mentioned by McKane [2007] are:

- The focus of the management is on core activity, which is manufacturing/production and not energy efficiency. In other words, energy management has no place in the job descriptions and performance accountabilities of the employees.
- There is a budgetary disconnect between investment cost on the projects (including equipment purchases) and operating expenses. The emphasis is generally placed on lowest first cost rather than accounting for life cycle cost.

However, faced with fluctuating fuel prices and stringent environmental regulations this state of affairs is changing. Nowadays, the industries place increased importance on the energy management. Thus, in parallel with the governmental and institutional programs, the industrial sector tends to systematically adopt *energy management* methodologies for facilitating more rational use of energy.

Definition

The goal of an energy management program is to monitor, record, analyze, critically examine, alter and control energy flows so that energy is always available and utilized with maximum efficiency [O'Callaghan, 1993].

The objective of energy management program in industry is to reduce energy costs and decrease environmental pollution. This can be achieved by pursuing the following approaches:

II.1.3.1 Adopting energy standards

In the recent years serious effort has been made to develop *Energy Standards* that can provide guidelines and benchmarks for the engineers and managers for making industrial operations less energy intensive. *ISO 9000/14000* quality and environmental management system [McKane, 2007] and *ANSI/MSE 2000* [ANSI, 4] are the example of some of these Energy *Standards*. However, these standards are largely oriented towards housekeeping and may not applicable to all industrial units.

II.1.3.2 Top-Down approach

The top-down approach consists of analyzing the industrial unit as a whole in an aggregated manner from empirically derived historical data. The top-down approach for energy managements can be summarized briefly by the following steps:

- First, an *energy audit* is carryied out which develops energy inventory of the entire industrial unit. The energy audit identifies the potential processes and equipments that can be targeted to improve energy efficiency.
- After energy audits, *plans* are drawn up to improve energy efficiency of targeted processes and

equipments through design, retrofit or improved maintenance practices.

- The *financial costs* that are likely to be incurred by adopting these plans are then analyzed. The pros and cons of the proposed plans are scrutinized in terms of short and long planning horizons.

Tyrgg & Karlsson [2005] used the top-down approach to identify the energy savings that can be achieved by replacing older processes and machinery with the new energy efficient ones. They energy savings were 32% in the support functions while 16% in the production process.

II.1.3.3 Bottom-Up approach

The top-down approach can contribute to reduction in energy costs but it has some limitations. The energy management of an industrial site needs a much in depth insight into the unit processes, which can not be provided by the global view adopted in top-down approach. Muller *et* al. [2007] remarked that," *the top-down approach must only be considered as a first step of a more detailed analysis in which not only unit efficiency but also heat recovery and energy conversion integration should be considered.*"

In this respect, bottom-up approach is used which makes detailed analysis of individual production processes and plant machinery (boiler, turbines, process equipments, etc) using engineering concepts like:

- Thermodynamics
- Fluid dynamics
- Heat and mass transfer
- Psychometric

One of the key developments in this regard has been the increased use of computational tools and softwares that aid in carrying out more thorough and accurate analysis.

II.2. POTENTIAL MEANS FOR REDUCING ENERGY CONSUMPTION OF INDUSTRIAL SITES

II.2.1 Total Processing System / Industrial Unit: Definition

According to [Papoulias & Grossmann, 1983a], an industrial unit also called '*Total Processing System*' can be regarded as an integrated system, comprising of three interactive components (see figure II.1).

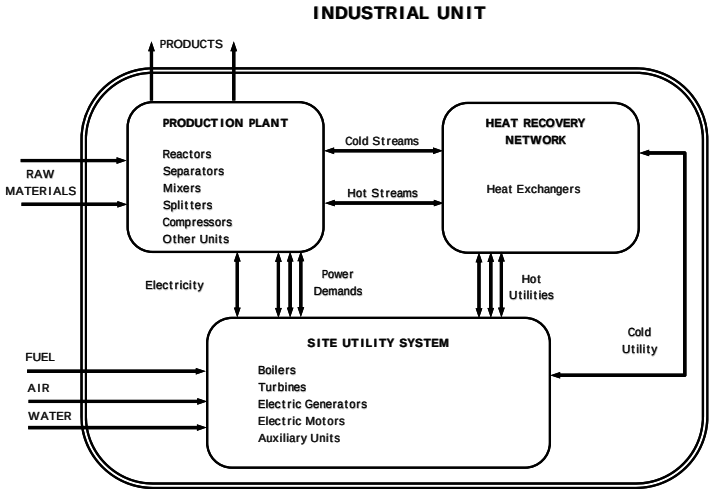

Figure II.1: An industrial unit comprising of Production plant, Heat recovery network and Site utility system

- The **production plant** is the component that performs the processing steps to transform raw materials into products. In most cases, production plant contains a number of processing units such as reactors, compressors, mixers which consume utilities in the form of electricity, heating utilities in

form of hot water and steam at different levels (high, medium and low pressures) and cooling utilities in form of cooling water and refrigerant.

- The **heat exchanger network (HEN)** has the task of exchanging heat among hot and cold process streams of the production plant in order to reduce the heating and cooling utilities. The optimal synthesis of this component is often crucial in determining the energy efficiency of the total system.
- The **utility system** provides the required utilities for the production plant (electricity and power to drive process units), and heating utilities for the heat recovery network (steam at different pressure levels). Typical units found in a utility plant are fired or waste heat boilers, different types of turbines, electric motors, electric generators, and other auxiliary power plant units. All these units can usually be combined in many feasible configurations that are capable of providing the required utility demands.

Each of these three components can be optimized in order to promote a more rational use of energy. The following section presents a review of the measures found in the literature to reduce the energy consumption of each component.

II.2.2 Improving Energy Efficiency for Production Plants

Energy driven productivity gains are generally possible for all production plants irrespective of their size and nature of operations. The two main methodologies used for improving energy efficiency in production plants are the exergy analysis and the process intensification.

II.2.2.1 Exergy analysis: an efficient tool for identifying process inefficiencies

Exergy analysis is a powerful tool for identifying and addressing of the sources of energy efficiencies in production plant. A recent study conducted for the U.S. department of energy used the "exergy" analysis for pinpointing inefficiencies in chemical manufactures [JVP Int. & Psage Research, 2004]. This section summarizes the key aspects of this report along with other literature to define and highlight the benefits of exergy analysis.

(a) Energy Bandwidth

The energy bandwidth diagram introduced by the U.S. department of energy provides a snapshot of the energy losses that can potentially be recovered through improvements in technology, process design, operating practices, or other factors. Bandwidth analysis quantifies the differences between different measures of energy:

- The ***theoretical minimum energy*** represents the energy required to synthesize the product in its standard state, at 100% selectivity, from the raw materials in their standard states, disregarding irreversibilities.
- In reality, the energy consumed by a process must exceed the theoretical minimum energy due to the non-standard conditions of reactions, products, and reactants; the formation of by-products; the need to separate products; and other factors. These conditions impose limitations that make it impossible to operate at the theoretical minimum. This higher energy requirement is sometimes referred to as ***practical minimum energy***.
- Finally, inherently inefficient or outdated equipment and process design, inadequate heat recovery, poor integration of heat sources and sinks, poor conversion selectivities increases the requirement of energy. Energy required under actual plant conditions is called ***current energy.***

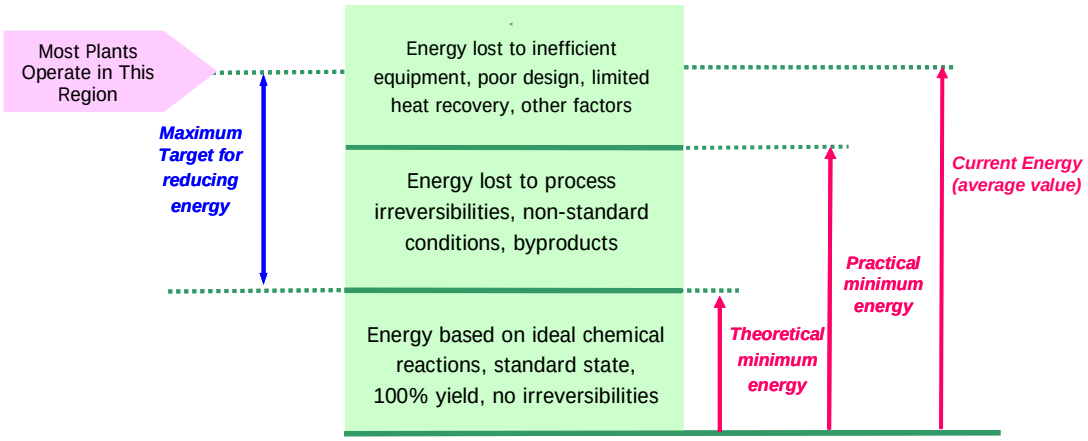

Figure II.2: Depiction of Energy Bandwidth [JVP Int. & Psage Research, 2004]

The greatest potential target for reduction in energy demand is then represented by the gap between the current energy and the practical minimum energy. However, without examining the quality of the energy in this band, it is difficult to credibly determine how much of that energy it is practical to recover under realistic plant operating conditions. In addition, it is not practical or economically feasible to reduce all process irreversibility-related losses or the inefficiencies. This is where exergy analysis can significantly assist in pinpointing opportunities.

(b) 1st law of thermodynamic and energy

Today engineers and scientists often use enthalpy or energy balances to evaluate the performance of production processes and quantify energy losses. This is based on the 1st law of thermodynamic, which states that *energy can neither be created nor destroyed*. Hence, energy only changes from one form to another and this energy can be expressed in mathematical form as:

$$Q_{in} + H_{in} \quad = \quad Q_{out} + H_{out} \qquad \text{[Eq. II-1]}$$

In this equation, H_{in} and H_{out} are the enthalpies of input and output streams of the process whereas, Q_{in} and Q_{out} are provided and extracted heats. However, the 1st law of thermodynamic places focus solely on energy conservation and does not consider the quality of the energy lost or the actual energy potential associated with process streams. Using enthalpy, for example, 1 MJ of low-pressure steam would compare equally with 1 MJ of electricity. In reality, the amount of usable energy from the low-pressure steam is less than a third of that represented by the electricity, because the energy quality of the low-pressure steam is much lower.

(c) Reversible/irreversible processes

Definition 🕮

*A **reversible process**, or reversible cycle if the process is cyclic, is a process that can be "reversed" by means of infinitesimal changes in some property of the system without loss or dissipation of energy [Sear & Salinger, 1986]. Due to these infinitesimal changes, the system is at rest throughout the entire process. In a reversible cycle, the system and its surroundings will be exactly the same after each cycle [Zhumdal & Steven, 2005]. In thermodynamics, the concept of reversible process is a quantitative one as it corresponds to a process for which no entropy is produced.*

Since it would take an infinite amount of time for the process to finish or require an infinitely large process, perfectly reversible processes is impossible in a real world environment.

(d) 2nd law of thermodynamic and exergy

The notion of quality of energy is present in the concept of exergy or "availaibility". This concept is based on the 2nd law of Thermodynamics which states that *not all energy can be converted to useful work.*

Definition

Exergy, also known as availability, is defined as the maximum amount of work that can be extracted from a stream at given state (T, P and x conditions) as it flows towards equilibrium. The portion that can be converted into useful work is referred as exergy, while the remainder is called non-exergy [JVP Int. & Psage Research, 2004].

To analyze a process from point of view of energy, it is preferable to perform exergy analysis rather than carrying out simple energy balances. Contrary to the enthalpy, exergy is a non conservative quantity whose losses result necessarily in creation of entropy and reduction in potential for doing useful work. Grassmann diagram (figure II.3) presents a true representation of this phenomenon where a process stream losses exergy (potential to do work) due to irreversibilities and emissions.

$$Ex_{in} = Ex_{out} + PEx \qquad \text{[Eq. II-2]}$$

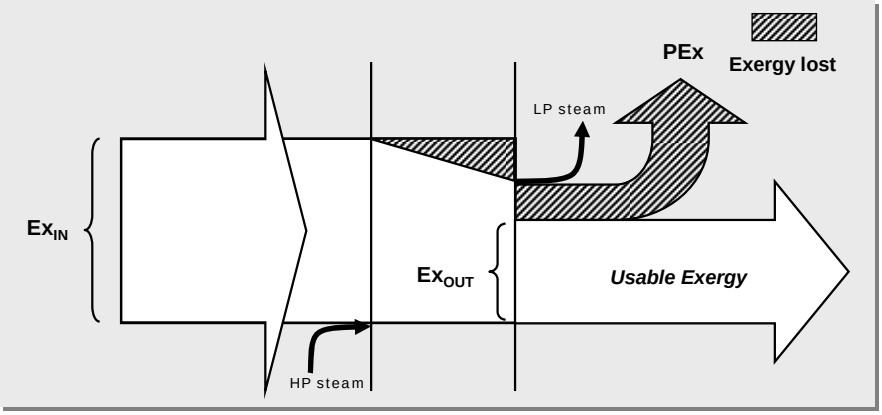

Figure II.3: Grassmann diagram depicting loss of exergy in a stream flow

(e) Methodology for conducting exergy analysis

The general methodology that is followed to improve the energy efficiency of a process based on exergy analysis is based on the following three steps:

Step 1: Exergy balances

The first step of the analysis is to establish the exergy balances of the process. This step can be further sub-divided into three tasks:

- Use a process simulator to develop the process flow sheets and stream properties.
- Determine exergy for individual process streams. To achieve this goal computer software like ExerCom that interfaces with Aspen Plus can be used. According to Hinderink *et* al. [1996] the exergy of a stream is composed of three major components: a chemical term, a physical term and mixing term. The knowledge of the three individual stream components allows for determining their share in exergy losses
- Extend the results to determine exergy balances around each processing unit/equipment in the process. For example, the Psage Research developed in-house software that interfaced with the Aspen Plus and Exercom to calculate exergy balances around each processing unit.

Step 2: Identify zones for improvement

This step involves locating the areas in the industrial process that consume most exergy. Various tools can be used for this purpose:

- Graphical tools such as Grassmann diagram which allow for visualizing the different types of exergy losses.
- Mathematical equations: The exergy efficiency of an individual processing unit is the ratio of exergy output to the incoming exergy.

$$\eta = \frac{Ex_{OUT}}{Ex_{IN}} = 1 - \frac{P_{EX,IN} + P_{EX,OUT}}{EX_{IN}} \quad \text{[Eq. II-3]}$$

According to Graveland & Gisolf [1998] as a rule of thumb the *potential for improvement* of a particular processing unit can be determined by using the formula:

$$PI = (1-\eta)(P_{EX,IN} + P_{EX,OUT}) \quad \text{[Eq. II-4]}$$

Generally the quantitative measurements from equation [Eq. II-3] and [Eq.II-4] are plotted on the graph in form of histograms.

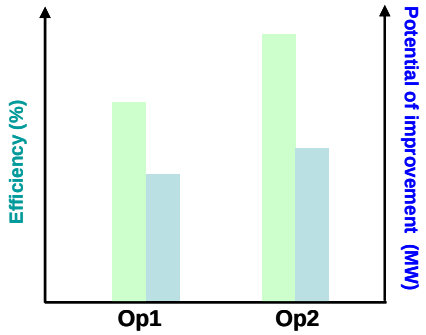

Figure II.4: Histograms representing exergy efficiency and potential for improvement

Step 3: Look at ways for improving the exergy efficiency of identified zones

After identification of the process areas responsible for poor exergy efficiencies, the final step is to look for ways of making these processes less exergy intensive. In other words minimize the creation of entropy in the identified areas. This step has been discussed in detail by Le Goff [1979], Rivero [2001] and Leites *et* al. [2003].

A number of studies can be found in the literature that demonstrates the effectiveness of the exergy analysis. For example, Utlu *et* al. [2006] conducted energy and exergy analysis on a raw mill in a cement factory. The rooms for improvement in energy efficiencies using energy balances were found to be 84.3 %. However, the exergy analyis demonstrated that actual improvement potential was only of 25.2 %. A similar study was conducted by Waheed et al [2008], on a fruit juice processing operation. The exergy analysis showed that the major source of exergy loss was the pasteurizer with an inefficiency of over 90%.

Mustapha et al. [2007], used exergy analysis to analyze the performance of the distillation column. The results showted that poor exit exergy were consequence of tray positioning. Moreover, they deduced that in order to improve the quality of distillate an additional distillation column was required.

Hence, for engineers and scientists working in the energy efficiency a true understanding of exergy analysis is of critical importance. The exergy analysis allows identifying and quantifying the processes that lead to energy inefficiency in the production plants.

II.2.2.2 Process intensification

One of the most efficient ways of reducing irreversibilities is by developping new and innovative processes. According to Marechal et al. [2005], "*new production routes, complete substitution of energy-intensive processes by low energy processes, and more integrated processes appear to be the key issue*". As an application of process integration, process intensification has been practiced since a number of years but it is only during the last decade that has emerged and received increased attention. Reay [2008] defined Process intensification (PI) as

Definition

Any chemical engineering development that leads to a substantially smaller, cleaner, safer and more energy efficient technology. It consists of the development of novel apparatuses and techniques which enhance the heat or/and mass transfer*

The figure II-5 recalls the technologies most frequently encountered in the PI. The PI is most often characterized by a huge reduction in plant volume – orders of magnitude – but its contribution to reducing energy consumption and also greenhouse gas emissions may also be significant. In the UK for example, *"Overall plant intensification was identified as having a technical potential of 40 PJ/year (about 1 million tonnes of oil equivalent/annum). The total potential energy savings due to investment in process intensification in a range of process unit operations were predicted to be over 74 PJ/year (1 PJ = 10^{15} J)"* [Reay, 2008].

Table II-1 gives an estimate of energy saving which could be obtained thanks to Process Intensification in three emblematic industrial sectors.

Table II.1: Energy saving estimates resulting from Process Intensification

	Bulk chemicals	Fine chemicals	Food
Multifunctional equipment (advanced distillation)	50–80% energy savings in 15% of processes. 9–18 PJ	Limited to separation processes, i.e. 10% of sector. Increase efficiency by 50%,	Drying and crystallisation. 10% total energy saving, worth 3–5 PJ
Micro/milli-reactors	A study by ECN in Holland suggests 20 PJ avings using heat exchanger-reactors. Micro-reactors extend this to 25 PJ	Applications in 20% of processes in the sector saving 20% of energy – 1 PJ Reduce feedstock and additives by 30% in 10% of processes saving 5–7 PJ	Spill-over from fine chemicals: <1 PJ
Microwaces (electrical enhancements)	†	Reduce feedstock and additives by 20–40% in 5% of processes: 2–3 PJ	20–50% saving in 10% of drying market: 1–1.5 PJ 10% energy reduction in product processing: 1–1.5 PJ
High gravity fields (e.g. spinning disc reactors, HiGee)	†	Reduce feedstock, solvents etc. by 50% in 5% of processes: 1–3 PJ	Assuming 20% of electricity in food production goes to emulsification, mixing etc. 10–20% saving worth 0.5 PJ

Process intensification in itself is an ongoing process. It will require time until these processes could replace energy intensive processes. In the wider scheme of things it can be considered as a medium term solution to the energy problem.

* This definition was originally proposed by [Stankiewicz & Moulin, 2000] but they did not include the aspect of safety in their statement.

† ECN in The Netherlands suggested that too little was known of the effects of microwaves and HiGee in the bulk chemicals sector.

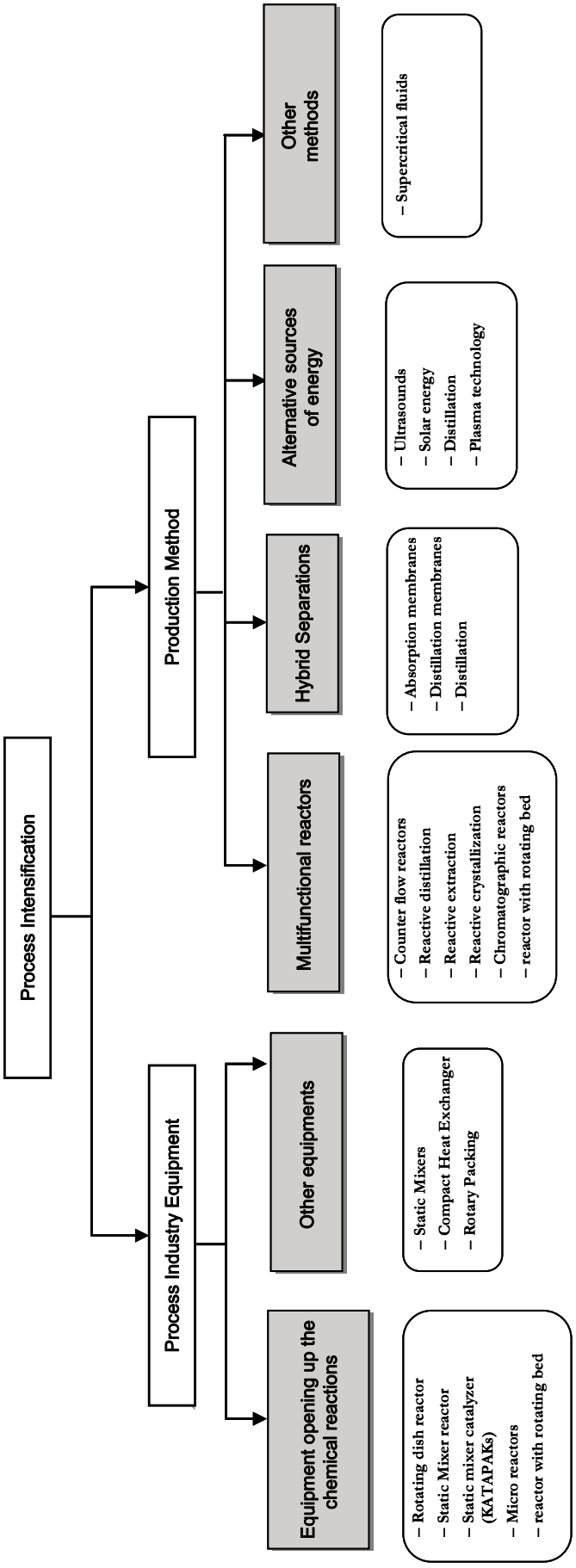

Figure II.5: Most frequently technologies in Process Intensification [Stankiewicz & Moulin, 2000]

II.2.3 More Systematic Use of Heat Integration Concept

Heat integration through use of Heat Exchanger Networks (HEN) is a prominent feature in many industrial units. HENs allow for exchange of heat among the various process streams and thereby reduce the need for import of heating and cooling utilities from the site utility system or an external source.

One of the major breakthroughs in the advancement of heat integration methodologies and design of HEN has been the development of the concept of *Pinch Technology* [Linhoff & Hindmarsh, 1983; Linhoff, 1994]. The distinguishing feature of pinch technology is that it leads to solutions that are not only thermally efficient but also adequate for treating industrial problems. As a result, pinch technology has enjoyed huge success throughout the industry and is considered as an indispensable tool for undertaking design of HEN. Kemp [2007] presented a detailed analysis on the various aspects of Pinch Technology.

Basic Terminology

- *Stream is any flow that requires to be heated or cooled.*
- *Hot stream (source) is the hot product which needs to be cooled down. They represent the heat in production processes.*
- *Cold stream (sink) is the feed that starts cold and needs to be heated up. They represent heat requirements of the process.*

The pinch technology is based on the basic heat transfer principle that there is a possibility of energy recovery by different streams as long as there is a temperature gradient between them (i.e. difference in temperature between among streams). The pinch technology identifies the most appropriate hot and cold streams in the production process and develops the corresponding heat exchangers network (figure II.6a).

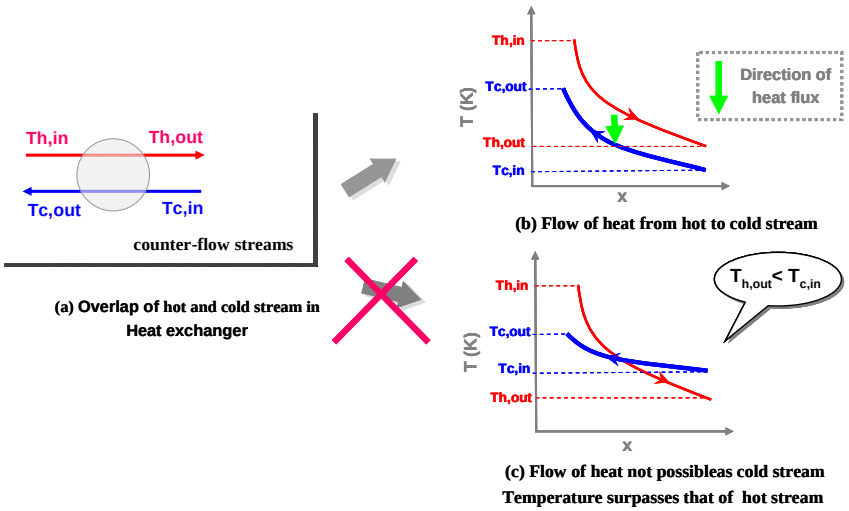

Figure II.6: Basic heat recovery principle

However, according to the 2nd law of thermodynamics a positive temperature driving force must exist between the hot and the cold streams to enable the heat exchange. In other words, heat can only be transferred from a hot stream to a cold stream if the temperature of the hot stream surpasses that of the cold stream (figure II.6b & II.6c).

The energy exchange between the two streams can be represented by the following equation:

$$Q = U \cdot A \cdot \Delta T_{ml} \qquad \text{[Eq. II-5]}$$

where Q = Heat load (KJ)

U = Heat exchange coefficient (KJ/m².°C)

A = Area for heat exchange (m²)

and $\Delta T_{ml} = \frac{\Delta T_1 - \Delta T_2}{\ln\left(\frac{\Delta T_1}{\Delta T_2}\right)}$ (see figure II.7)

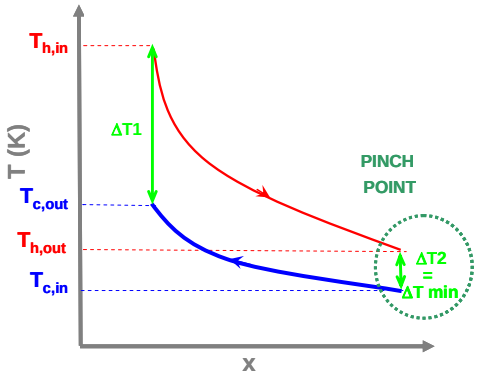

Figure II.7: Heat exchange between streams and pinch point

According to the equation II-5, the quantity of heat exchanged between the hot and cold stream is directly proportional to:

- Heat exchange coefficient (dependent on the nature of the flow streams)
- Surface area provided for the heat exchange
- Driving force ΔT_{ml} between the two streams, which itself is an exponential function of temperature gradient of the inlet and exit temperature differences (figure II.7).

Definition 📖 *'Pinch point' is the minimum distance between the hot and cold stream. Heat exchange only takes place above the pinch point, therefore it is a bottleneck that limits the maximum heat exchange among the hot and cold streams.*

II.2.3.1 Pinch analysis of continuous processes

Gundersen [2000] has divided the whole design of HEN of continuous processes into four phases:

a) *Data Extraction*, which involves collecting data for the production plant and the site utility system.
b) *Targeting*, use of pinch technology to find the hot and cold utility targets.
c) *Initial design*, where an initial Heat Exchanger Network is established.
d) *Optimization*, where the initial design is simplified and improved economically.

(a) Data extraction

The first and most critical step in pinch analysis is to understand the process well and extract the necessary information about the various process streams. This includes identification of process streams that need to be heated, cooled or for which there is a phase change (evaporation or condensation). Then, among plethora of information extract features essential for the pinch analysis. This is an extremely time consuming procedure as ignoring important streams would naturally lead to sub-optimal HENs.

The necessary data requirements for each process stream are as follows:

- $\dot{m}$ is the mass flowrate (kg/s, tons/h, etc.)
- C_p is the specific heat capacity (kJ/kg°C)
- T_{in} is the inlet/supply temperature (°C)
- T_{out} is the exit/target temperature (°C)

On the basis of the above data the utility requirements for each stream is established using equation [Eq II-6].

$$\Delta Q_C = \dot{m} \cdot C_p \cdot (T_{in} - T_{out}) \qquad \text{[Eq. II-6]}$$

(b) Targeting

For the targeting, the first step consists in fixing the value of the minimum allowable temperature (ΔT_{min}). As mentioned in equation [Eq. II-5], the maximum amount of heat exchange between the streams is directly proportional to both surface area and driving temperature. Therefore, the minimum allowable approach temperature (ΔT_{min}) and surface area for heat exchange provide the key constraints for design of HEN (figure II.8). The same amount of heat exchange between the streams can be achieved by:

- Increasing the surface area and decreasing the approach temperature, this leads to diminished requirement for importing hot and cold utility. However, the large surface area increases the capital cost for constructing the heat exchanger.
- Increasing the approach temperature and decreasing the surface area, this leads to diminished capital cost for constructing the heat exchanger. However, the cost of import of hot and cold utility from an external source is increased.

Thus, to reduced the overall costs a compromise is made between the minimum allowable approach temperature (ΔT_{min}) and surface area for heat exchanger.

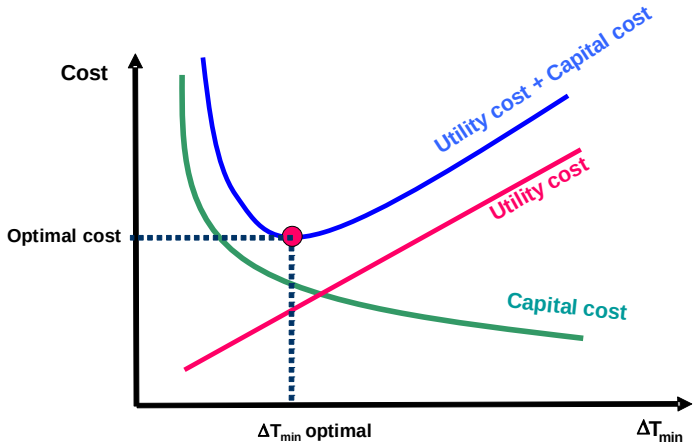

Figure II.8: Trade off made between heat exchanger size and utility import costs

Given the minimum allowable temperature (ΔT_{min}), the further steps consist in establishing performance targets such as:

- The Minimum Energy Requirement (MER)

The initial approaches for targeting made use of the concept of *composite curves* which combines the hot and cold streams on a temperature-enthalpy diagram (see figure II.9). A single curve represents all the hot streams and a single curve represents all the cold streams, these curves are respectively called *hot* and *cold composite curve*. The overlap between the hot and cold composite curve represents the maximum amount of attainable heat recovery within the process. The *overshoot* at the bottom of hot composite curve represents the minimum *cooling requirements* while the *overshoot* at the top of cold composite curve represents the minimum *heating requirements*. These cooling and heating requirements must be fulfilled by a site utility system or an external source.

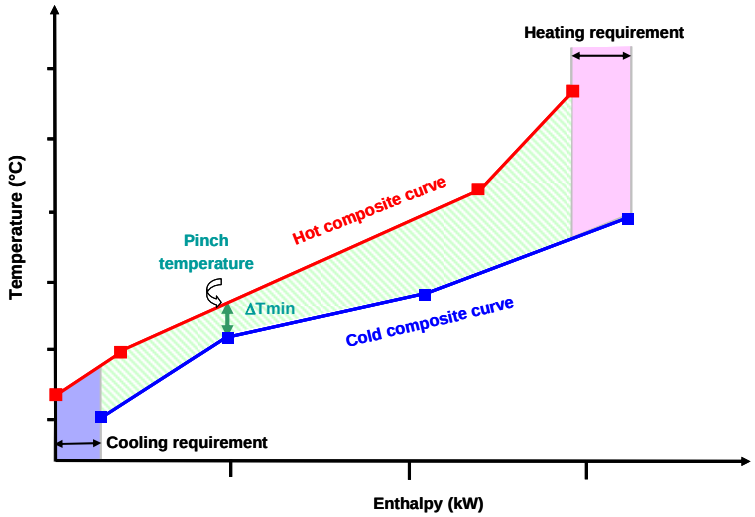

Figure II.9: Targeting through the use of Composite curves

This approach for determining the minimum heating and cooling requirments relies on a graphical analysis which could be imprecise and quite difficult to implement. To cope with this drawback, Linhoff & Hindmarsh [1983] introduced 'Problem table algorithm (PTA)' which allowed the calculation of hot and cold utilities without using any graphs. The PTA is a more systematic approach which permits the location of pinch temperature and determining the hot and cold utility.

- The Minimum number of heat exchanger units required in the HEN

  The minimum number of heat exchanger units is determined by using an empirical rule that was proposed by Honholm [1971]. According to the rule the minimum number of units is usually one less than the total number of process streams and necessary utilities.

  $U_{\min} = N - 1$ [Eq. II-7]

- The Minimum surface area required for the heat exchange.

  The minimum surface area is calculated using the "Spaghetti Design" proposed by Townsend & Linhoff [1984]. The Spaghetti design aims to make optimal use of driving force in order to minimize the total surface area. It is assumed that to maximize heat exchange all heat exchangers in the same enthalpy interval (marked by dotted lines in figure II.10) must have exactly same temperature profiles.

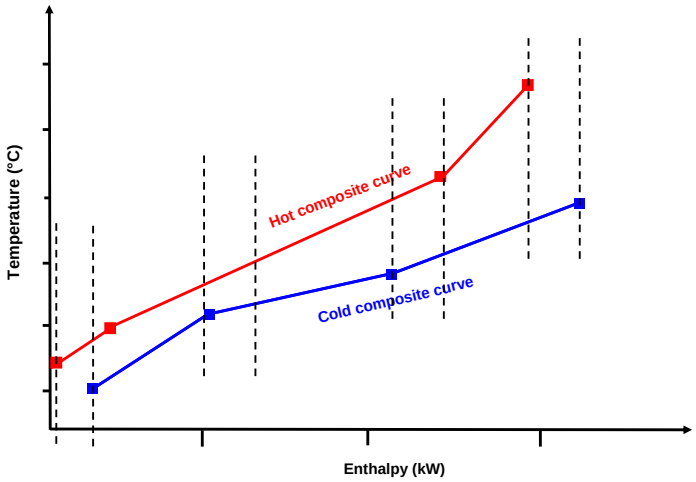

Figure II.10: Heat exhchangers placed in the same enthalpy interval

Afterwards, a Bath formulae (named after the place where the equation was presented) is used to estimate the minimum surface area.

$$A_{\min} = \sum_j \left(1/\Delta T_{LM,j} \right) \sum_i q_i/h_i \qquad \text{[Eq. II-8]}$$

Where q_i = change in enthalpy for stream i

h_i = film heat transfer coefficient for stream i

(c) Initial design

Knowing the performance targets, the next step of pinch analysis involves design of heat exchanger network. The most popular method for the design of the HEN is the grid diagram (introduced originally by Linhoff & Flower [1978]). The hot streams are placed on the top side of the grid diagram while cold streams placed on the lower side (figure II.11). The two linked circles between hot and cold process streams represent the presence of a heat exchanger. For example, figure II.11 represents a heat exchanger network composed of four heat exchangers between two hot streams and to cold streams. The dashed line represents the pinch temperature.

Linnhoff & Hindmarsh [1983] proposed *Pinch Design Method* for design of HEN design, an approach which is still widely used. The objective of Pinch Design Method is simply to start design at the Pinch temperature, where driving forces are limited and the critical matches for maximum heat recovery must be selected. The matching rules simply ensure sufficient driving forces, and they attempt to minimize the number of units. The design then gradually moves away from the pinch, making sure that hot streams are utilized above Pinch temperature and vice versa for cold streams below Pinch temperature.

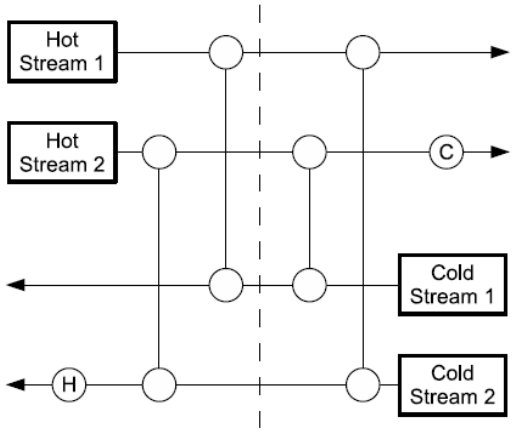

Figure II.11: A grid representation of the Heat Exchanger Network (HEN)

In case where the process stream(s) do not achieve the desired temperature external hot or cold utility sources are used. For example in figure II.11 'hot stream 2' uses a cold utility source and 'cold stream 2' uses a hot utility source to fulfil their heat requirements.

(d) Optimization

The last step in the pinch analysis is the analysis of the initial design to look for improvement possible improvements in the design HEN. The objective is to look for more efficient HEN design; which is achieved by evaluating alternative HEN design. This includes changing the Minimum Energy Consumption requirements, number of heat exchangers in network and modifying the pinch temperature (pinch point).

However, this optimization step is combinatorial in nature and requisites evaluation of large number of possible networks.

Mathematical programming can be used to address this problem. Papoulias & Grossmann [1983b] proposed an approach for the systematic synthesis of HEN which is based on different transhipment models. This approach could be incorporated in the natural form within the MILP formulations for the synthesis of the Total Processing System/industrial unit. Yee & Grossmann [1990] proposed the idea of a HEN Superstructure and used mixed integer linear programming (MINLP) approach to eliminate the surplus elements from the HEN Superstructure.

II.2.3.2 Pinch analysis of batch processes

For heat integration in batch process, there are two constraining factors, temperature and time. In other words, the exchange of heat among streams depends not only on temperature gradient but also the specified times in which these process streams exist. Hence there are two possibilities for exchanging heat within batch processes:

- Direct heat exchange using a heat exchanger (when the streams exist in same time period)
- Indirect heat exchange using heat storage system (when streams do not exist in same time period)

Generally, heat storage is an expensive and sometimes impossible proposition and the production plant scheduling is altered (rescheduling) to allow for more direct heat exchange.

The design of HEN of batch processes follows the same four stages as undertaken in continuous processes – data extraction, targeting, initial design and optimization [Gundersen, 2000].

(a) Data extraction

In batch processes the data extraction is more difficult than its continuous process counterparts.

Instead of measuring the heat flow (heat duty) using equation [Eq.II-6], for batch plants it is more appropriate to measure the total amount of heat using equation [Eq. II-9].

$$\Delta Q_B = \dot{m} \cdot C_p \cdot (T_{in} - T_{out}) \cdot (t_f - t_s) \qquad \text{[Eq. II-9]}$$

where:

- ΔQ_B is the instantaneous heat flow (KW.h)
- t_f is the start time of process stream (s, h, etc)
- t_s is the end time of process stream (s, h, etc)

Furthermore, two additional data requirements are the start and finish times of process streams and types of streams that exist in batch processes [Kemp, 2007].

Table II.2: Basic types of stream in batch processes

Type	Condition	Example
Stream A	Streams with fixed or constant T_{in}, T_{out}, t_s, t_f, and Q.	This corresponds to the situation encountered in continuous processes at steady-state.
Stream B	Streams with a gradual change of Q with time, even though temperature is constant.	Volatile product being vaporized from a batch reactor
Stream C	Streams with a gradual change in temperature with time, even though Q is constant.	Liquid being heated in a reaction vessel by electric resisitance
Stream D	Streams with a gradual change in both temperature and Q with time.	Batch reactor is heated or cooled with steam or cooling water

(b) Targeting

There are a number of methods in batch processes for identifying the minimum energy consumption requirements (MER). Many of these methods are inspired from the Pinch analysis techniques developed for continuous processes. Generally, the methods for setting performance targets in batch processes can be classified into two broad categories:

1. Methods where *temperature* is primary constraint and *time* is secondary constraint. In some cases, the time aspect is completely ignored.

   TAM : Time Average Model

   Linnhoff et al. [1988] presented the idea of TAM, which ignores the time completely and assumes that heating or cooling of a stream takes place in entire batch period. It is similar to the targeting approach adopted in continuous process with the only difference being that TAM makes use of equation [Eq. II-6] to determine the absolute maximum heat recovery that can be attained from the process streams. The drawback of this approach is that it assumes that heat can be stored without any losses.

   TSM : Time Slice Model

   TSM splits the time horizon into smaller time intervals (slices) and considers heat recovery in each of these intervals. The minimum energy consumption targets obtained by TSM are more realistic and provide the actual potential of energy saving without using heat storage. The accuracy of TSM model increases with increasing number of time intervals.

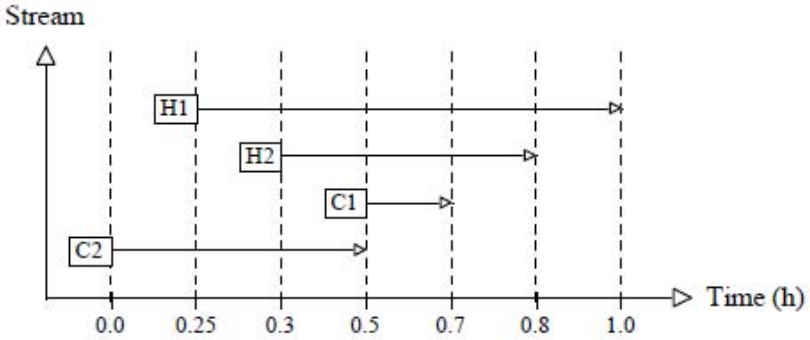

Figure II.12: Time Slice Model (TSM) for simple batch process

   CA : Cascade Analysis

   Kemp & Deakin [1989] presented a two dimensional heat cascade approach which was inspired from Problem Table Algorithm (PTA) developed by Linhoff & Hindmarsh [1983]. The heat cascade makes use of supply and target temperatures as well as starting and finishing time to represent the heat load for all process streams. The CA assumes that heat can be directly transferred to a lower temperature stream (direct heat exchange) or a later time interval (indirect heat exchange).

2. Methods were *time* is primary constraint and *temperature* is secondary constraint.

   TPA : Time Pinch Analysis

   Wang and Smith [1995] presented TPA which uses time as the only constraint to set energy targets and completely ignores the aspect of temperature. Like the TAM approach the TPA gives extreme values but it can be used to locate the ***Time Pinch*** of the processes and identify the possible process modifications.

(c) Initial design

As the majority of performance target methods are primarily based on temperature aspect, *Pinch Design Method* [Linnhoff & Hindmarsh, 1983] can also be used for HEN design of batch processes [Gundersen, 2000]. However there are some additional features that must be incorporated:

- At all times, the use of *Heat Storage* must be considered as an alternative to the use of external heating and cooling utilities.
- The Time aspect normally means that separate initial networks must be developed for each time interval.
- The overall network can then be found by superimposing all the individual networks.
- The various time intervals normally have different *Pinch* points. This affects the individual networks, since the matches depend on the Pinch location. Hence it is nearly impossible to design a HEN that meets the Targets that are set using TAM.

(d) Optimization

The methods used for optimization and simplification of heat exchanger networks for continuous processes (section II.2.3.1.d) can be used without any changes for batch processes.

II.2.4 Use of Site Utility Systems

The industrial concerns may generate their own utilities or purchase them from public supply companies. Nowadays, the general trend is to self generate heating utilities (steam at different pressure levels) and to purchase the electricity from a public supply company. However, industries whose processes have significant steam requirements (e.g. chemical plants, forest products, textiles, etc) or whose by-products and wastes can be used as fuel prefer to generate their own electricity. The self-generation of electricity by an industrial unit is often referred to as *auto-production*.

In order to auto-produce utilities, an industrial site requires an assembly of equipment (who deliver mechanical and electrical energy) on or nearby the production plant site. Hence, this assembly of equipment is referred to as site utility system.

During the last few decades, the advances in power plant technologies have lend a helping hand to increased use of site utility system. These improvements have meant that small scale based thermal plants (running primarily on fossil fuel) are a viable option for many industrial units. Moreover, the advent of distributed generation has given greater credence to the notion of auto-production.

Definition 🕮 Distributed Generation is the paradigm shift away from centralized units towards generation of electricity and heat at or close to the point of demand (i.e. consumer).

One of the biggest advantages offered by centralized units is the economies of scale. However, these units reject large quantities of heat energy into the environment. This waste energy can be meaningfully utilized if the consumer is nearer to the point of generation. Hence, the concept of Distributed Generation (DG) has emerged that focuses on the setting up of smaller capacity utility (electric and heat) producers. The capacity of these utility producers would be small but they would be scattered all over the geographical territory and thereby closer to the consumer [Södermann & Pettersson, 2006; Hiremath *et* al., 2007].

The deregulation in energy market makes the proposition of DG even more viable. The deregularized markets allow for small scale energy providers to connect to the transmission network and sell their electric

or heat utilities. This is particularly true of European countries like Denmark, UK and Germany. Thus, in future, the utility supply structure will be based on distributed generation (figure II.13) rather than being based on large centralized units, with a large portion of utilities being generated using renewable energy resources.

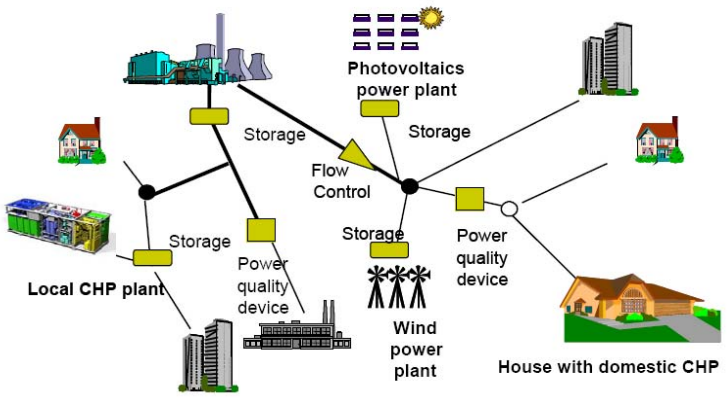

Figure II.13 : Future Distributed Generation based utility supply structure [Fieldstone enterprise, website]

II.2.4.1 Types of technology used in site utility system

The site utility systems can choose from among five different technologies generating utilities. A brief summary of these technologies are presented in the table II.3.

Among these technologies, combined heat and power (CHP) is the most promising for site utility system. Combined heat and power (CHP), also known as cogeneration, is the simultaneous generation of electricity and other form of useful thermal energy (steam or hot water) in a single power plant. The advantage of the CHP technology can be established by using a simple illustration (figure II.14).

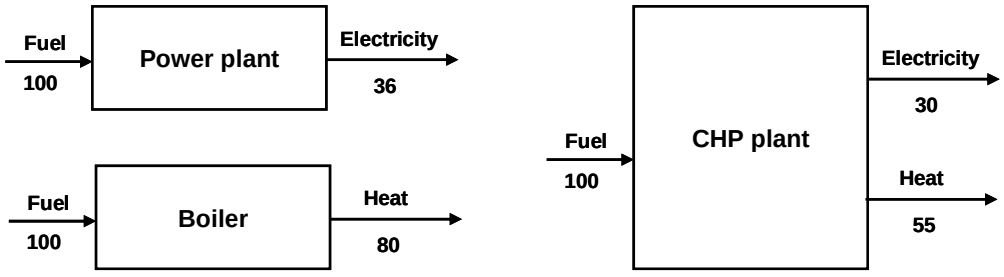

$$\eta = \frac{36+80}{200} = 0.58 \qquad \eta = \frac{30+55}{100} = 0.85$$

Figure II.14 : Energy efficiencies of CHP vs. conventional utility systems

On average, conventional power generation is only 33-36% efficient and rest of energy is rejected is released as waste heat. Similarly, the energy efficiency of the industrial boiler is around 80%[1] and rejects rest of energy into atmosphere. The CHP plant valorizes the heat rejected through electricity generation rather than releasing it wastefully into the atmosphere. Thus, overall energy efficiency of CHP plant is considerably higher.

[1] The boiler efficiency is a function of load factor and varies but on average it can be assumed to be around 80%.

Table II.3: The technologies used by site utility system

Technology	Figure	Possible type of fuel	Operational strategy	Main characterisitics
Steam units		• Fossil fuels (coal, petroleum products, natural gas or other gaseous fuels) • Other combustible fuels, such as biomass and waste products	• Steam produced in a boiler turns a turbine to drive an electric generator • A water pump brings the residual water from the condenser back to the boiler • Waste heat is emitted to atmosphere or sent to a lake	• 33 - 36% thermal efficiency • Moderate times required to start the unit • Generally used to meet the base and average load demands
Gas units	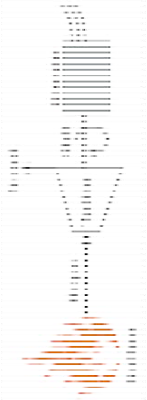	• Primarily natural gas or other gaseous fuels. • Other possibility is of using petroleum products.	• Hot gases released during burning of fossil fuels are used, rather than steam, to turn a turbine that drives the generator • Waste gases are disposed through exhaust stack	• Slightly less efficent than the steam units • Unit can be started in very short time • Can be used to meet the base load, average as well as peak load demands
Combined cyclce	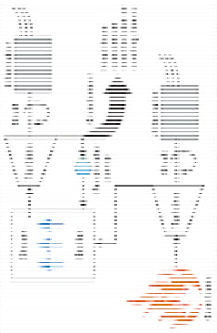	• Primarily natural gas or other gaseous fuels. • Other possibility is of using petroleum products.	• At first, gas turbine is used to generate electricity • Then, waste heat from the gas tubine is used to boil water in a steam generator • Steam produced is used to turn a turbine which is connected to electric generator	• 50 - 60% thermal efficiency • Used to meet the base load, average as well as peak load demands
Combined Heat & Power (CHP)		• Fossil fuels (coal, petroleum products, natural gas or other gaseous fuels) • Other combustible fuels, such as biomass and waste by-products	• Simultaneous generation of electricity and other form of useful thermal energy (steam or hot water) • Rather than emitting waste heat into atmosphere, it is used to meet hot utility requirements of production processes or central heating	• More than 80 % thermal efficiency • Used to meet the base and average load demands
Diesel or other IC engine	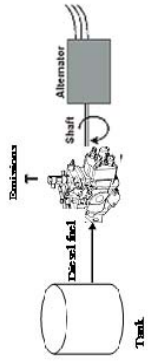	• Petroleum products generally the diesel fuel	• The internal combustion engine is used to run an electric generator • Hot gases released during the burning of fossil fuels are emitted into atmospheres	• Slightly less efficient than the steam units • Used only to meet peak load demands

Combined heat and power (CHP) is an important energy production technology as it improves the overall energy efficiency of the process and at the same time reduces the emissions of green house gases especially that of CO_2 [Lemar, 2001]. Both the United Nations [UNESCAP, 5] and European Union [EU, 1997] see CHP as one of the very few technologies that can offer a short or medium term solution for pollution control by increasing the overall energy efficiency.

II.2.4.2 Improving energy efficiency of site utility system

The objective of a site utility system is two fold:

- meeting the electricity and heat utility demands of production plant,
- but also adopting operational regimes that allow for maximum energy efficiencies.

However, until last few decades, surprisingly little research was carried out to address the design and operation problems of the site utility system. Chou & Shih [1987] while proposing a thermodynamic oriented model for design and synthesis of site utility system remarked, *"there is little discussion in literature concerning how to systematically design a good plant utility system. A fundamental study of system's intrinsic properties is therefore required".*

A similar thermodynamic oriented approach had earlier been presented by Nisho *et* al. [1980]. They used heuristics to address the problem of design of a steam power plant. However, the problem with the thermodynamic based approaches is that they find design solutions that are thermodynamically excellent but they do not take into account the economic feasibility. Hence, thermodynamic approaches routinely come up with solutions that would be impossible to implement due to financial constraints. On the other hand, mathematical based optimization approaches can readily accommodate both design and financial constraints. Hence, they are considered more suitable to deal with the design and operation problem of site utility system.

One of the earlier mathematical programming based approaches to address the problem of site utility system appeared in the same year as the research of Nisho *et* al. [1980]. The mathematical approach using Mixed Integer Linear Programming (MILP) was applied by Grossmann & Santbanez [1980] for the synthesis of a steam generation systems in a chemical process. Even though, the model proposed by Grossmann & Santbanez [1980] was very simple, which did not account for use of turbines and motors to meet electricity demands, but their research was quite significant as it introduced the concept of binary variables into the utility system design environment. These binary variables can not only be used for the on/off decision but also for including or excluding the different equipments from the process design. Papoulias & Grossmann [1983a] developed on this concept of binary variables in the MILP approach to present the notion of site utility system "superstructure".

There are a number of ways of setting up the equipments used in utility systems like boilers, turbines, pumps, etc. Hence, the design of an optimal site utility system requires evaluation of many alternative configurations. Papoulias & Grossmann [1983a] proposed grouping together the most commonly employed utility system equipments into one single superstructure. Then, based on the fixed electricity and heat utility demands of the utility system, MILP based mathematical model was used to optimize the superstructure. The MILP model scrutinized among the various feasible configurations and selected the one that was the best according to the selected objective (usually minimizing cost).

Kalitventzeff [1991] applied Mixed Integer Non-linear Programming (MINLP) for the design of site utility system, while Bruno et al. [1995] applied non-linear equations to solve the superstructure problem initially proposed by Papoulias & Grossmann [1983a]. Since the plant machinery and equipment used in site utility sytem display non-linear behaviour (e.g. boilers), therefore MINLP leads to more accurate representation of the real worl environment. However, the MINLP models are computationally more demanding and require long times to resolve the problem. Moreover, the MINLP models have difficulty in attaining global minimum and therefore can not ensure finding of optimal solution.

Heuristic methods have also been applied to solve the same kind of problem: Maia *et* al. [1995] used simulated annealing to for an optimum design of site utility system.

More recently, Maréchal & Kalitventzeff [1996] applied the graphical targeting approach for design and operation of the site utility system. Their approaches made use of the idea of total site composite heat source

and heat sink curves, which set targets for the potential heat recovery (Dhole & Linhoff [1992] introduced the idea of total site composite curves). The heat recovery targets consequently set the mark for design of site utility system that would minimize the cost of utilities.

Later, Maréchal & Kalitventzeff [1998] proposed a combined approach, MILP and an "expert system", for selection of optimal site utility system. This combined approach is composed of three steps and is based upon the concept of Effect Modeling and Optimization (EMO) [Maréchal & Kalitventzeff, 1997]. The three steps are:

1) Find the most optimal configuration of the utility system from the superstructure.
2) Use the expert system to identify the most appropriate equipment technologies that are suitable to be used in the proposed configuration. For example, choose among different gas turbine that would be able to meet the heat requirements.
3) Evaluate the utility system identified in step 1 with the equipments identified in step 2. Several solutions are generated that determine the cost breakeven points associated with each of these technologies.

All the above mentioned approaches made the hypothesis of constant demand (electricity and heat utility) from the production plant. However, a fluctuating demand of the production unit over time is a situation commonly encountered during the running of site utility system. While responding to these demand changes, the utility system has to choose among a number of alternatives. This can be explained using a simple example

Example

Scenario 1:

Faced with an increase in demand of process steam, the utility system must increase the generation of steam. However, the utility system must either:

- *Increase the load factor of current running boiler*
- *Start another boiler*
- *Combine both solutions, i.e., increase the load factor as well as turning on another boiler*

Furthermore, in case of multiple idle boilers, the utility system might have to decide which one of them to switch on. The increased steam generation by the boiler also presents the opportunity for electricity generation by expanding steam through steam turbines.

Scenario 2:

The demand of process steam decreases which leads to excess of steam in utility system. The utility system must decide either to:

- *Keep boilers operating at the same steam level and increase the load factor of the steam turbine, thereby generating more electricity. This might mean that an idle steam turbine might be brought into operation.*
- *Decrease the steam generation in the boiler thus leading to fuel savings. But in this case, the utility system would have to decide which boiler to turn off.*

On the basis of these different scenarios, it is clear that while looking for optimum utility system design, it is necessary to incorporate the affects of variable operating conditions, which leads to a *multi-period optimization*. Hui & Natori [1996] developed a MILP formulation for multi-period operational planning of site utility system. Maia & Qaasim [1997] used simulated annealing to solve the problem of synthesis of utility system with variable utility demands. The multi-period problem for synthesis and operational planning of utility system under varying demands was solved by Iyer & Grossmann [1998] using a MILP formulation. The complex MILP formulation developed was solved using a bi-level decomposition algorithm. Maréchal &

Kalitventzeff [2003] used a genetic algorithm to extend the targeting approach into a multi-period problem environment.

Another aspect that was ignored during the design and operation problem of the utility system was the simplified models developed for individual equipments, like, turbines, boiler, etc. Among other things, these models neither accounted for the effect of equipment size on performance nor for reduced energy efficiencies at part load. Mavromatis [1996] improved the model for steam turbines. Later on, Mavromatis & Kokossis [1998a, b] formulated an MILP model for design of steam turbine network which evaluated impact of variations in operations on the energy efficiencies. The model was tested on a real life example and they reported improvements in region of 11% against cases that neglect variations or consider unit efficiencies as constant. Varbanov *et* al. [2004] incorporated new gas and steam turbine models that gave more real assessment of their energy efficiencies at part load. They incorporated these new models with other elements of utility system into an overall model for cogeneration systems. Aguillar *et* al. [2007a, b] proposed a robust computational tool to address grassroots design, retrofit and operational problems for the utility system, considering structural and operational parameters as variables to be optimized at the same time.

In regards to the CHP, a detail review on short term operational planning of the cogeneration (CHP) was presented by Salgado & Padrero [2008]. The paper classified the research on CHP technology in terms of formulations and solution methodology (MILP, MINLP, genetic algorithms, etc), objective function, air pollution, etc. Soylu et al. [2006] developed a multi-period MILP model for collaboration between CHP plants located at different industrial sites. The objective was to fulfill the utility demands in a mutli-site environment. However, the utility demands during each time interval were assumed to be given a priori.

The classification of the literature review is presented in figure II.15. The analysis of the literature reviewed points out that until now, little effort has been spent in integrating the production plant with site utility system. Even though efforts have been made to look for site wide solutions (e.g., Marechal and Kalitventzeff [2003]) by incorporating heat integration with site utility system, all these researches still consider production demand to be a given priori. These demands might change over time (issue dealt in multi-period models) but no feedback exists so that the short term scheduling of production unit and short term operational planning of utility system can be correlated.

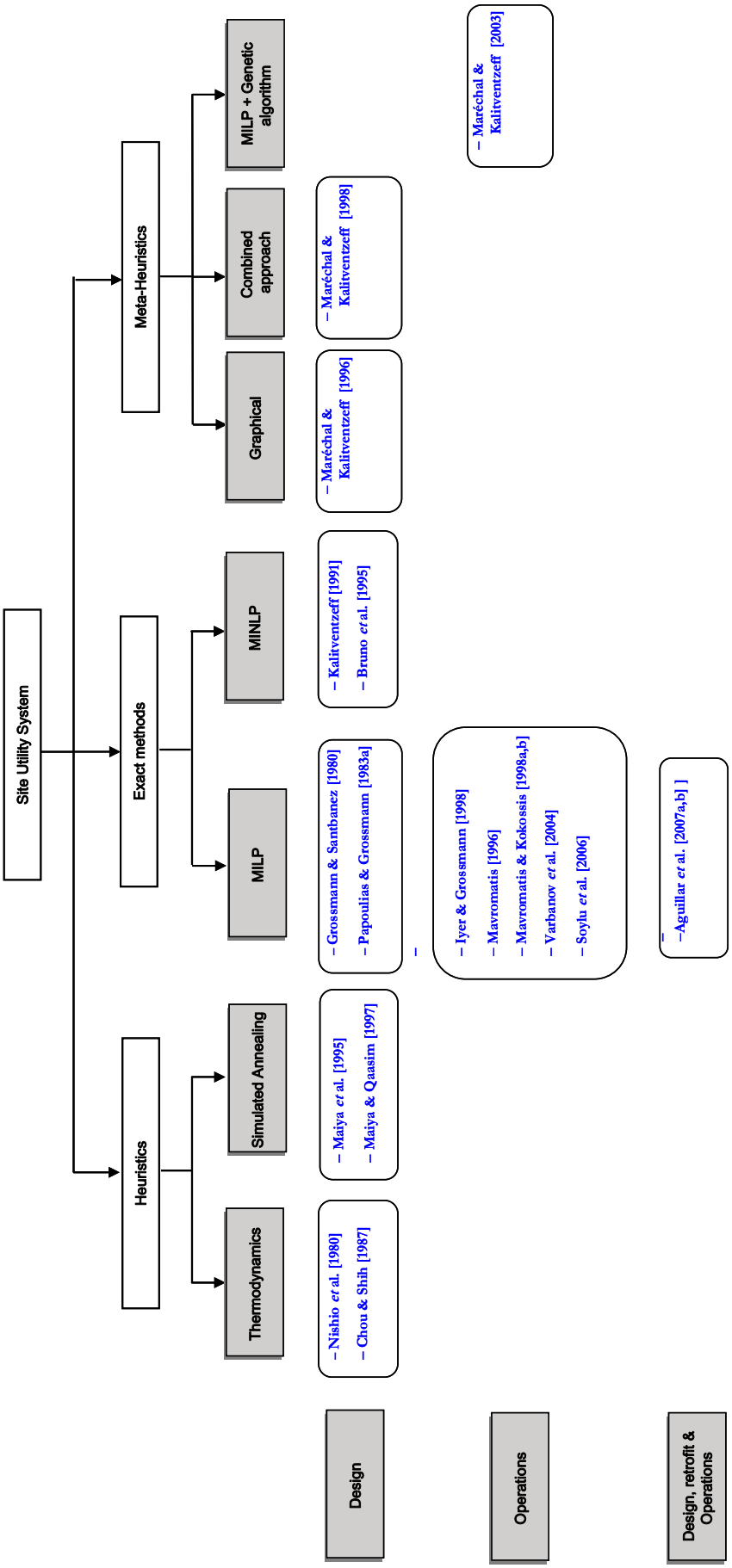

Figure II.15 : Classification of the literature review of site utility system

II.3 MANAGEMENT OF TOTAL PROCESSING SYSTEMS BASED UPON BATCH PRODUCTION

As precised in the first chapter, our study focuses on batch processes. The *design* and *retrofit* are essential phases of any industrial unit. Design is carried out at the very outset and lays out the blue print for the structure and inner workings of the all the production processes. Conversely, retrofitting normally happens much later in life of the industrial unit. The objective of retrofit is to addition of new and updated parts to the industrial unit, which would lead to increased productivity or increased energy efficiency.

However, for the most part of their life, the industrial units are in *operation* phase. Unlike their continuous manufacturing counterparts, the batch manufacturing industries can choose from a variety of operational regimes during the operational phase i.e., where and how much of raw material and intermediate products need to be process in the production equipments. This enables batch manufacturing industries to be more flexible and to adapt themselves to changes in product demands.

On the other hand, this flexibility makes management of the batch manufacturing industrial units more difficult. Among the variety of possible operation regimes, the management should choose a regime that allows the industrial unit to operate at highest possible productivity levels. As a result, management of the batch manufacturing industrial units is more challenging and requires more critical decision making.

II.3.1 The Sequential Approach: Traditionally Used In Industry

Faced with the complex management problem the general tendency in the batch industrial units is to adopt the traditional approach, which involves sequential resolution of three sub-problems (figure II.16):

1. First of all scheduling of the production plant is carried out, which based on the production recipes allocates limited resources (processing equipments) to produce the final product(s). Scheduling determines the number of tasks (processing operations), timing of these tasks and batchsize of each task to be performed in production plant.
2. Then on the basis of scheduling the utility demands for the production plant are calculated. In these calculations the concept of energy integration [Corominas et al., 1994] and especially that of pinch analysis [Linhoff, 1994] can be used to develop a heat exchanger network that minimizes the utility demands from the site utility system [See Section II.2.3].
3. Finally, knowing the utility demands, the final step is operational planning of the site utility system. The objective in this step is to operate the utility system in such a manner that it not only meets the utility demands of production plant but also minimizes the energy costs [See Section II.2.3].

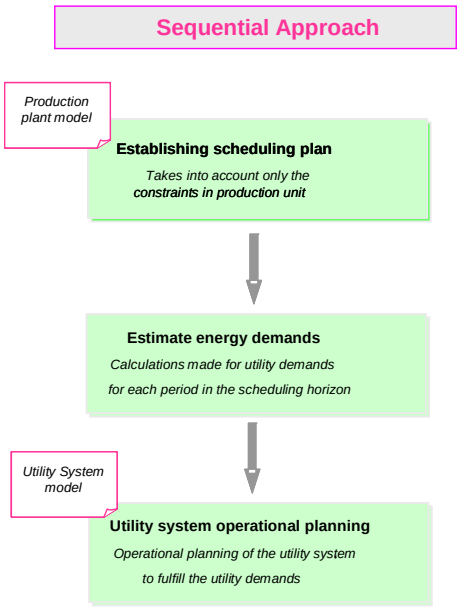

Figure II.16: Traditional sequential approach

In this kind of approach, the relationship between the production plant and the utility system is of master and slave. The activity level of the utility system is dependent on the utility demands of the production plant but energy constraints are not included while performing scheduling of the production plant. This lukewarm approach towards considering utility system in overall considerations can perhaps be explained by the price of fossil fuel. The adage "production is king" has been prevalent in the industry and role of utility system was just perceived to be of a supporting function. But over the last few years the increased fuel costs has meant that considering utility system as a subsidiary function is no longer feasible.

Moreover, the traditional approach is excessively dependent on the production plant and does not place enough emphasis on the heat recovery network and site utility system. Adonyi *et* al. [2003] pointed out that the utility demands are strongly dependent on the scheduling of production plant. Hence, incorporating heat integration (through use of heat recovery network) after the carrying out the scheduling would lead to poor energy results. The same stipulation applies for the short term scheduling of the site utility system. The utilities generated in utility system have a direct correlation with the activity level in the production plant. In spite of this direct correlation, in the sequential approach, production plant scheduling problem does not take into account the operational planning of the utility system.

II.3.2 Scheduling Under Energy Constraints

To overcome the limitations previously mentioned, a more accurate approach would consist in the scheduling of batch plants including energy constraints. The scheduling aspect of the production plant has been subject of extensive research. However, few scheduling models have been proposed in which the heat integration or the management of utilities is explicitly taken into account. This section presents a brief review of these studies.

II.3.2.1 Integrated scheduling and heat integration

In batch processes along with direct and indirect heat exchange, there is another possibility for improving the energy efficiency – scheduling of production plant. This aspect can be explained using a simple example, which was presented by Kemp [2007].

Example

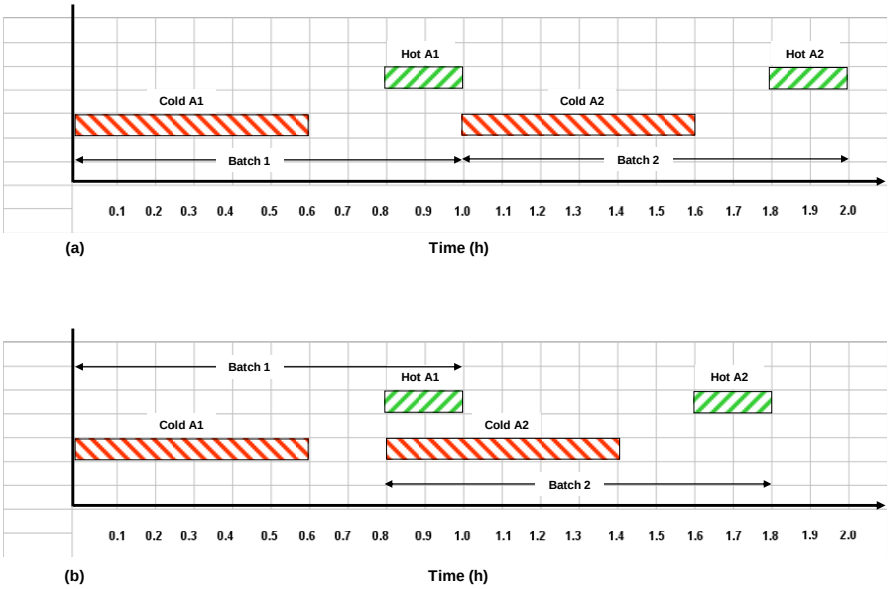

Figure II.17: Gantt charts for streams: (a) initial schedule, (b) rescheduling

Figure II.17a depicts the initial scheduling of the production process. As things stand, there is no possibility of heat recovery. However, as shown in figure II.17b, if the batch 2 is advanced by 0.2h, its cold stream A2 will overlap with the hot stream B1 in batch 1 and they can exchange heat directly. Changing the timing of the different processes to promote heat exchange between cold and hot streams is called rescheduling.

The rescheduling allows the process streams to stay in same temperature range as before, but move into different time intervals. The early targeting approaches for design of HEN like Time Averaged Model (TAM) [Linhoff et al., 1988] heavily relied on the rescheduling to improve the heat recovery capacity. However, rescheduling not only adds additional burden on plant management but in some case, it is not even possible.

To remove this need for rescheduling the heat integration consideration should be incorporated directly into production scheduling. Corominas *et.* al [1994] used heurestics to study the possibility of heat exchange between hot and cold streams in a multi-product batch production plant operating in campaign mode. The campaigns were launched taking into account the thermodynamic, topological and time constrints. Vaklieva-Bancheva and Ivanaov [1996] used a MILP formulation to design HEN for a multipurpose batch plant operatin in campaign mode. The advantage of operating in campaign mode is that the sequence of processing operations to be performed is known a priori.

Papageorgiou et al. [1994] extended the STN framework originally proposed by Kondili *et* al. [1993] to incorporate the heat integration into batch scheduling problem where the sequence of processing tasks was not known at the start. Barbosa-Povoa [2001] presented a mathematical formulation for the detailed design of the multi-purpose batch facilities where heat integration features were addressed at the design level. The problem is formulated using discrete time STN and maximal state task network (mSTN) to represent the interactions between the process and equipment. Majozi [2006] proposed a continuous time formulation for optimization of heat-integrated chemical plants. Chen & Chang [2009] presented an integrated approach for handling scheduling and heat integration problem in a unified framework.

II.3.2.2 Scheduling and management of utilities

Egli & Rippin. [1985] discussed the importance of utility management at a batch industrial unit. They stressed on the need of incorporating utility requirements while performing the scheduling of the production

plant. Kondili *et* al. [1988] developed a mathematical model to address the issue of manufacturing plant production planning with the objective of reducing operational costs. The cost of energy was assumed to vary during the day and energy consumption was dependent on the nature of the product manufactured and the equipment used. The impact of energy cost was catered by positioning energy cost in the objective function. This initial model was further enhanced and Kondili *et* al. [1993] developed the first generic short-term batch scheduling algorithm. The limited availability of the utilities was modeled as a *scheduling resource constraint*.

However, unlike the resources classically considered in the scheduling problems (processing equipment or manpower), utilities have special characteristics which must be taken into account. Utilities are a more versatile resource and are present in various forms (different pressure steam, electricity, hot water). Utilities are also a resource which is difficult to store in its ultimate form. Some recent studies have taken into consideration these peculiarities of utilities. Hait *et* al. [2007] presented an approach designed to minimize the energy cost of a foundry, subject to the specific provisions relating to the power pricing and market based strategies for load shedding. Behdani *et* al. [2007] developed a continuous-time scheduling model, which included the constraints related to the production, availability and consumption of different types of utilities (water cooling, electricity and steam). However, in all these approaches, the focus is primarily on the production plant and site utility system is either totally ignored or modeled in an aggregated manner.

Some recent works have tried to address this imbalance. Moita *et* al. [2005] developed a dynamic model of salt crystallization production plant and associated cogeneration unit. Finally, Zhang and Hua [2007] established a MILP model for determining optimal operating points of an oil refinery production process coupled with a cogeneration unit. However, these models are specific to the production plants and lack the generic nature which is necessary for a more general scheduling model.

Conversely, as demonstrated in section II.2.4.2 the research on utility system has concentrated exclusively on the design and operational optimization of the site utility system where the electricity and steam supplies to production plant are known a priori. Hence, all the emphasis is placed uniquely on reducing the energy costs and the aspect of scheduling of production plant is overlooked.

II.3.3 Towards Integration of Three Functions

On the basis of above discussion and keeping in with the spirit of the process integration, it is necessary to look for a methodology that would replace this sequential approach with a simultaneous *integrated approach*. This approach would incorporate the aspects of heat recovery and operational planning of the site utility system into the general plant production scheduling problem. Hence, rather than using the sequential approach, the management of total processing system would rely on a simultaneous resolution of three problems.

As discussed previously (see section II.3.2.2), the first step towards the integrated approach have already been made in studies by introducing models that integrate heat integration directly into scheduling multipurpose batch plants. Adonyi et al. [2003] propose a model using *S diagrams* that incorporates energy integration while performing the production plant scheduling. Majozi [2005] and Chen & Chang [2009] presented an integrated approach for handling scheduling and heat integration problem in a unified framework. While presenting a detailed framework for heat and power integration in batch and semi-continuous processes, Puigjaner [2007] drew attention towards the necessity for integrating the production plant with CHP based site utility system.

Consequently, an obvious next step would be to introduce a model that would undertake a simultaneous and integrated scheduling of batch production plant and site utility systems (represented by CHP plants).

II.4. CONCLUSION: FOCUS OF THE PRESENT THESIS

The objective of this study is to develop **a generic model for the integrated scheduling of batch processes and CHP plant**. This model should be applicable to any type of discontinuous production process and any kind of CHP (cogeneration) plant configuration.

To achieve this objective, the following chapter will analyze the existing short-term scheduling frameworks, namely state task network (STN) and resource task network (RTN), and figure out whether they, in their present format, can be applied directly to carry out the short-term scheduling production plant and its associated CHP based site utility system. In case the current frameworks can not be directly employed, it would be mandatory to look for making some changes in these frameworks so that they can be used for scheduling the entire industrial unit (figure II.18).

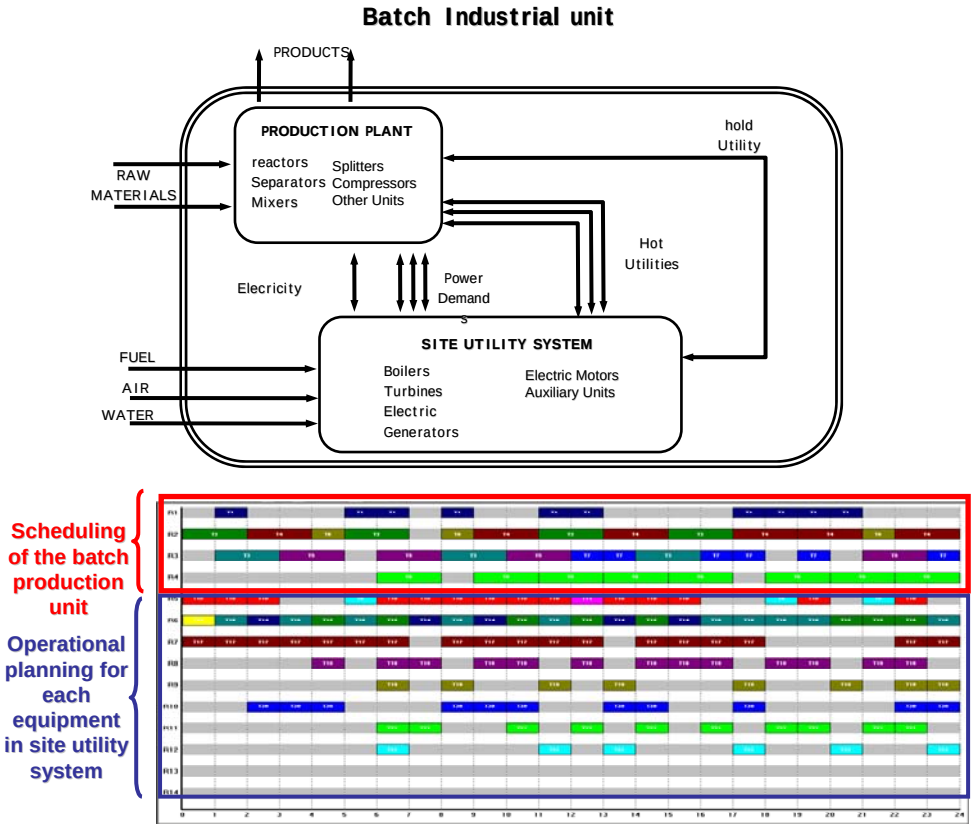

Figure II.18: Integrated scheduling of production plant and site utility system

Note: In this dissertation the design and retrofit aspects are not under consideration and emphasis is only placed on the operational aspects.

CHAPTER III

TOOLS AND METHODS FOR ENERGY EFFICIENT BATCH PROCESS SCHEDULING

SUMMARY

The chapter two has demonstrated the necessity to develop a generic model for the simultaneous scheduling of batch processes and utility systems. For this reason, the current chapter gives a detailed account of tools and methods existing in the literature for the modeling and the solving of scheduling problems.

A batch process scheduling problem involves three key elements: a *process* or *recipe* which describes the set of chemical and physical steps required to make product, a *plant topology* which consists of set of equipment within which these steps are executed, and a *market* which defines the amounts, timings and quantities of product required. The aim of a general scheduling framework is two fold: firstly, develop a graphical representation of the production process (recipe and plant topology) and secondly, based on the graphical representation, build up a generic mathematical model which can be used to determine the production scheduling.

After a brief perspective on the batch process scheduling problem, the first part of this chapter analyses the various key components and methodologies involved in batch process scheduling problem and establishes the effectiveness of mixed integer linear programming (MILP) technique. In the second section, a detailed analysis of existing frameworks used for modeling batch scheduling problems - Recipe Networks, State Task Networks (STN) and Resource Task Networks (RTN) – is developed using a simple illustrative example. This analysis enables to highlight the missing elements of the existing frameworks for the modeling of utilities and emphasizes the need of an extended framework that should be developed to perform integrated production and utility system scheduling.

RESUME

Le chapitre précédent a mis en évidence la nécessité de développer un modèle générique dédié à l'ordonnancement simultanée d'ateliers de production batch et de centrale de cogénération. Dans cette perspective, ce chapitre se propose de réaliser un inventaire des outils et méthodes dédié à la modélisation et à la résolution des problèmes d'ordonnancement existant dans la littérature.

Un problème d'ordonnancement de procédé batch met en jeu trois éléments clef : une *recette* qui décrit la succession des étapes physico-chimiques requises pour fabriquer le ou les produits désirés, la *topologie du procédé* qui décrit l'ensemble des équipements nécessaire à la réalisation de ces étapes et leur organisation physique et un *plan de production* qui définit les quantités de produits à fabriquer et les dates de livraison.

Après avoir caractérisé brièvement les problèmes d'ordonnancement d'ateliers de production, la première section s'attache à démontrer l'efficacité des méthodes de résolution de ce type de problème fondées sur la programmation MILP. En prenant appui sur un exemple 'fil rouge', la deuxième section présente ensuite une description détaillée des formalismes dédiés à la modélisation MILP des problèmes d'ordonnancement - Recipe Network (RN), State Task Network (STN) et Resource Task Network (RTN) -.

L'analyse détaillée de l'ensemble de ces formalismes permet enfin de mettre en exergue les éléments manquants pour la prise en compte des ressources de type utilité et conclue ainsi à la nécessité de proposer un formalisme étendu.

III.1 SCHEDULING IN BATCH PROCESS INDUSTRY

III.1.1 Brief Background

Scheduling is a decision-making process that plays an important role in all aspects of human life. From planning daily activities, to setting up time-table in schools, to devising the operational regime in large enterprises; scheduling is used everywhere and by almost everyone. Mostly, it is a rough sketch that is kept in back of the mind or at best a manually drafted list of activities to be performed (kind of *personal* Gantt chart). At individual or even small scale activity level, the manual scheduling suffices but in case of industrial activity, where each decision bears a critical impact on productivity, there is need for more organized and scientific approach to scheduling.

The domain of Operations Research (OR) has placed huge emphasis on developing models for addressing the scheduling problem [Pinedo, 2008]. These models have been extensively used in manufacturing and service industries to deal with wide ranging scheduling issues (from allocation of jobs in a machine shop, to designation of errands among construction crew, to optimization of utilization of runways at an airport, etc). Until the last decade, the scheduling in process industry was still being done by hand [Dockx *et* al., 1997; Honkomp *et* al., 2000]. The reason behind this poor adoption of general OR scheduling models lays in the nature of industrial activities that distinguish process industry from its manufacturing and assembly industry equivalents. The process-oriented scheduling models, unlike the general OR scheduling models, need to account for *material flows* and *network topologies* that are not addressed in traditional serial and multistage systems [Grossmann, 2005].

According to Reklaitis *et* al. [1997], three features are shared by all process industry:

1. *Recipe or Process* describes the set of chemical and physical steps required to make product.
2. *Plant topology* portrays the set of processing equipment within which these steps are executed. The processing equipments are linked by a network of pipes and storage tanks.
3. *Market* which defines the quantities and timings of finished products required by the consumer.

In return, the batch process plant can be classified into two distinct categories: multi-product plants and multi-purpose plants. The difference between the two was established by Barbosa-Povoa [2007] as:

- *Multi-product batch plant:*
  In multi-product batch plant, commonly known as "flow shop" in OR literature, all product batches follow the same production path i.e. batches are specific to particular processing equipment (Figure III.1a). Products show a high degree of similarity and the same equipment configuration can be used by all products without the need of rearrangement.
- *Multi-purpose batch plant:*
  In multi-purpose batch plant, commonly known as "job shop" in OR, the products batches may follow arbitrary sequences and can be produced using different processing equipments (Figure III.1b). Multi-purpose batch plants are more general purpose facilities and require wider sharing of plant resources like processing equipments, utilities, raw materials, etc.

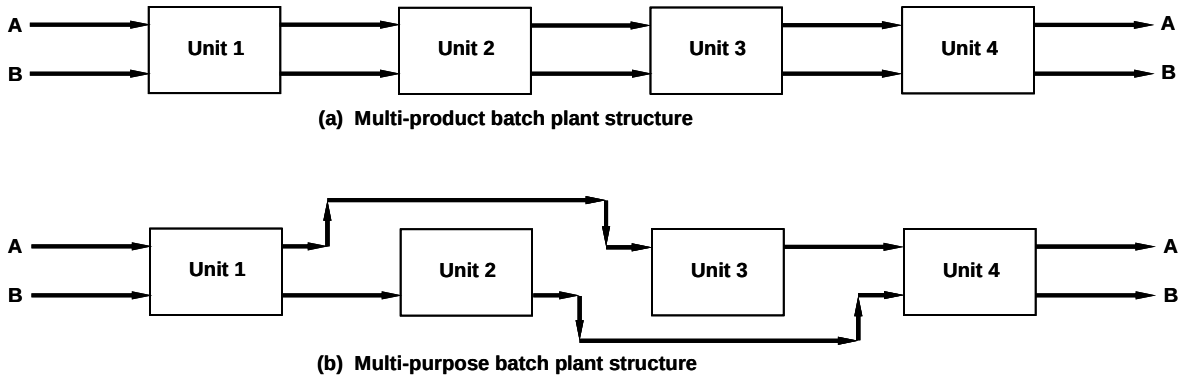

Figure III.1: Multi-product and multi-purpose batch plant structures (Barbosa-Povoa [2007])

III.1.2 Features of Batch Process Scheduling Problem

According to Pekny & Reklaitis [1998] the process scheduling problem can be described by the following definition:

Definition

A batch scheduling problem is a resource allocation procedure which answers four primary questions: what (quantity of products will be processed), when (timing of process operation), where (equipment that will perform process operation) and how (to process bearing in mind operational constraints).

Table III.1: Definition of batch process scheduling problem

DETERMINE	GIVEN
What Product amounts: lot sizes, batch Sizes	**Product requirements** Horizon, demands, starting and Ending inventories
When Timing of specific operations, run lengths	**Operational steps** Precedence order Resource utilization
Where Sites, units, equipment items	**Production facilities** Types, capacities
How Resource types and amounts	**Resource limitations** Types, amounts, rates

Similar to a general OR scheduling model, a batch process scheduling model ensures the production of a set of products in a most efficient manner. This most efficient manner is defined by means of an objective function, which is typically maximizing profits, minimizing makespan, minimizing tardiness, etc. However, the scheduling problem arising in batch process industries usually displays high degree of complexity as it needs to incorporate additional features not usually encountered in general OR scheduling problems.

The batch process scheduling problem, hereafter referred simply as *scheduling problem*, needs to fully incorporate the three key features: recipes, plant topology and market demands. The *plant topology* in process industry is quite complex (especially in multi-purpose plants) as processing equipments can perform a various processing operations: therefore, the scheduling problem has to choose from a relatively large number of feasible alternatives. Generally, the product *recipe* in process industry requires several processing operations to transform raw material into finished products. Furthermore, each processing operation may result in a stable intermediate product which can be stored or in an unstable intermediate product which should be processed

without delay. Therefore, the scheduling problem needs to evaluate storage constraints while carrying out sequencing of processing operations.

Méndez *et* al. [2006] identified thirteen (13) major aspects that need to be considered while developing scheduling problem for batch processes. As a result, the scheduling problem involves large number of *discrete decisions*, which makes scheduling inherently combinatorial in nature and very challenging from the computational perspective [Pekny & Reklaitis, 1998].

1. Process/plant topology
2. Equipment assignment
3. Equipment connectivity
4. Inventory storage policies
5. Material transfer
6. Batchsize
7. Batch processing time
8. Demand pattern
9. Changeovers
10. Resource constraints
11. Time constraints
12. Costs
13. Degree of certainty

According to Applequist *et* al. [1997], the scheduling problem belongs to the set of NP-complete problems. This means that, execution time for an exact algorithm on given scheduling problem is exponential to the problem size. Hence, the optimal solution to the scheduling problem would require significantly long calculation time. Applequist *et* al. [1997] enumerate three strategies usually used to deal with the NP-complete scheduling problem:

1. *Change the problem to be solved to make it easier:*

   This is by far the most popular strategy for addressing the NP-complete nature of scheduling problems. This strategy involves simplifying the given scheduling problem by modifying the constraints, parameters and objective function until a given scheduling algorithm can solve the problem. However, this strategy can result in significant economic and performance penalties when a problem which has feasible solutions is changed to accommodate a solution scheme.

2. *Use an exact algorithm:*

   This strategy generally involves the use of mathematical programming to solve NP-complete scheduling problems. The advantage of this approach is that it provides the optimum solution to scheduling problem but in return, the solution times can be quite long. Nevertheless, during the last few decades, the advancements in computational power have made mathematical programming extremely popular. The mathematical programming itself involves a number of different techniques such as linear programming (LP), integer programming (IP), mixed integer linear programming (MILP), mixed integer non-linear programming (MINLP), constraint programming (CP), hybrid of CP and MILP, etc. The type of scheduling problem normally dictates the type of mathematical programming technique that should be adopted. In order to reduce the solution times, the mathematical programming uses some simplified assumptions but sometimes this could lead to solutions that are operationally infeasible.

3. *Use of heuristic algorithm:*

   This strategy is equivalent to guided search of the candidate solutions space. Assumptions are used to reduce the size of solution space making the search of feasible solution easier. The main advantage of this approach is that it guarantees reasonable solution times. In contrast, they do not assure solution quality, i.e. neither solution optimality nor solution feasibility. Heuristic algorithms are generally used in conjunction with mathematical programming or used for solving problems with already pre-specified sequence of operations with fixed batchsize.

III.1.3 Using Mixed Integer Linear Programming (MILP)

Several excellent reviews in the context of batch process scheduling problem can be found in Méndez et al. [2006], Floudas & Lin [2004], Kallrath [2002] and Pekny & Reklaitis [1998]. These reviews clearly point out that during the last few decades mixed integer linear programming (MILP) has been most widely used for solving the batch process scheduling problem. The above mentioned reviews have identified some key characteristics that are required while formulating the scheduling problem using MILP. These characteristics are discussed in this section.

III.1.3.1 Time representation

Time representation is a major issue for all process scheduling problems. All existing mathematical formulations can be classified into two main approaches: discrete-time models and continuous-time models. Both approaches are illustrated in figure III.2.

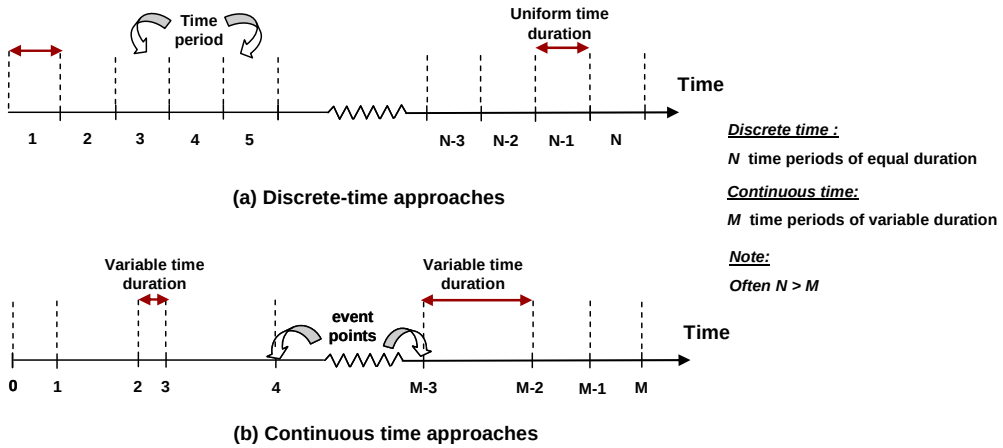

Figure III.2: Discrete and continuous time representation

(a) Discrete time approach

The time discretization approach has been widely used in OR to handle job shop scheduling problems. The discrete time approach consists of:

- Dividing the time horizon of interest into a number of **time periods** of uniform duration.
- Allowing the events (beginning or ending of tasks) to happen only at the boundaries of these time periods (figure III.2a). If during a time period, a processing operation is performed, then it is considered as *active* time period otherwise it is *inactive* time period.

The strength of this approach is that it provides specific and known locations (boundary points of time period) where all the events can take place. This reduces the complexity of the scheduling problem, which can be resolved by monitoring the boundary points.

There are two major disadvantages of discrete time approach: solution accuracy and computational time. The accuracy of discrete time approach entirely depends upon the duration of time period. Smaller the duration of time period greater is the precision of the model. In return, this amplifies the problem size as the number of time periods required to monitor a time horizon of interest are increased significantly. As the problem size has a direct correlation with the computational time, time discretization has to result from a trade off between small discretization and solution times. The normal practice in discrete time models is to set the *greatest common factor (GCF)* of the processing time as the time period.

(b) Continuous time approach

In the continuous time approach, the events are potentially allowed to take place at any point in the continuous domain of time. This is achieved by introducing the concepts of *variable event times*, which can be defined for the entire process or for each unit. Unlike the discrete time approach that require scheduling constraints to be monitored at each time period, the continuous time approach monitors these constraints on a limited number of event points (figure III.2b). This eliminates a major fraction of the inactive time periods and reduces the problem size. However, due to the variable nature of event times, the modeling of the scheduling process becomes more challenging. In fact, the continuous-time approach may lead to mathematical models with more complicated structures than compared to their discrete-time counterparts. The continuous time approach requires the introduction of many big-M terms into the resource and inventory constraints. This might ultimately lead to an increased integrality gap and have negative impact on the solution.

Based on the concept of event-time intervals, the continuous time approach can be further subdivided into *global time points* and *unit specific time events*. The difference between the two approaches can be explained easily using a representative example.

Example

Consider six process operations (a, b, c, d, e and f) that need to be allocated on three different processing equipments U1, U2 and U3.

Global time points:

The start of any process operation corresponds to an event point and the point grid is common for all processing operations. For the example under consideration 6 event points are required to address the scheduling problem.

Unit specific events:

The start of any process operation corresponds to an event point but the events are only specific to particular processing equipments. For the example under consideration, only 3 event points are sufficient to address the scheduling problem.

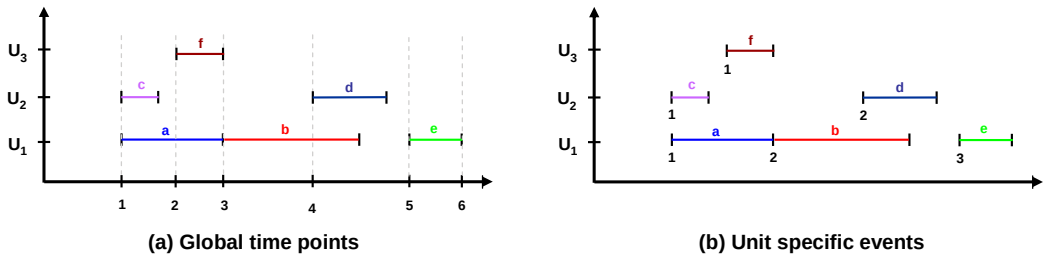

Figure III.3: Event based continuous time approach

III.1.3.2 Material balances

In process industry batches can be merged and split; a feature that is not commonly found in its manufacturing and assembly counterparts. This distinct characteristic leads to the need for incorporating material balance into scheduling problem. Two distinct approaches can be adopted to handle batches and batchsizes: a decomposed approach and a monolithic approach.

(a) Decomposed approach

This approach which is widely used in industry decomposes the whole scheduling problem into two stages: batching and batch scheduling. The first stage, *batching*, consists of identifying individual batches and their sizes. The batching is undertaken on the basis of some optimizing criteria e.g. makespan, work load, etc.

The second stage, *batch scheduling*, allocates these predefined batches to plant resources. The decomposed approach is often applied to processes dealing with *sequential structures*.

(b) Monolithic approach

The monolithic approach simultaneously solves *batching* and *batch scheduling* problem. These methods are able to deal with arbitrary network processes involving complex product recipes. The generic nature of these approaches usually implies large model sizes and their application is currently restricted to processes involving a small number of processing tasks. However, the results achieved from monolithic approach are generally better and more accurate.

III.1.3.3 Objective function

The solution of batch scheduling problem is dependent on the objective function chosen. Generally, the objective functions can be categorized either as performance based or economic based objectives. As illustrated on figure III.4, some of the performance based objectives could consist in minimizing:

- *Tardiness:* positive difference between final job completion time and the *due date*, i.e. eliminating the delay in meeting demand.
- *Makespan*: duration between the start of time horizon and the ending time of final job
- *Earliness* (opposite of tardiness): the positive difference between due date and final job completion time, i.e. finishing the job as close to due date as possible.
- *Flow time:* the duration between the launch of first job and the ending time of final job.

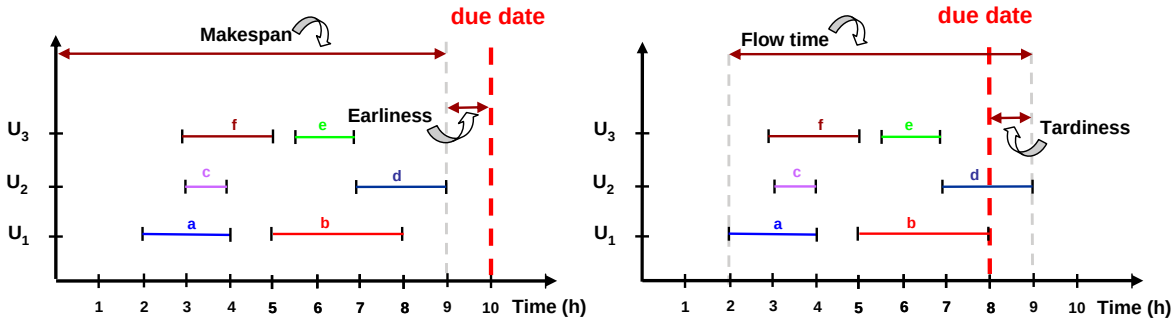

Figure III.4: Performance based objectives

The economic based objectives can be:

- Maximizing profit
- Minimizing inventory holding cost
- Minimizing operational cost

Generally, for the solution of the scheduling problem, only a separate objective (economic or performance based) are considered. However, nowadays, faced with multiple challenges (environmental, economic or human factors), increased emphasis is being placed on multiple objective functions. That is an objective function composed of several terms (which in some cases might even be conflicting). Simultaneous minimization of makespan and tardiness is an example of concurring multi-objective function while maximizing profits and minimizing gas emissions in an industrial unit is an example of conflicting multi-objective function.

Moreover, a weighted sum of individual functions can be used in the case where performance and economic based objectives need to be combined in a single multi-objective function. Janak & Floudas [2006] used an objective function composed of weighted individual functions to maximize sales while minimizing

starting times of tasks, number of binary variables, overall demand satisfaction, orders satisfaction, individual order amount, individual order due date, raw material demand, and minimum tank inventory.

III.1.4 Research Direction

The literature reviewed in the section III.1 is by no means an exhaustive evaluation of all the research that has been conducted in the field of batch process scheduling. The purpose was to briefly present all the key features of the batch process scheduling problem. Whereas other frameworks exist, the literature reviewed (both in chapter II and chapter III) has demonstrated that mixed integer linear programming (MILP) is widely used to model the behavior of all three components of industrial unit: production plant, heat recovery network and utility system. Therefore, *this study will also use MILP to address the integrated production and site utility system scheduling problem.*

As mentioned earlier, a very important decision in using MILP is whether to use discrete-time approach or continuous time approach. Méndez *et* al. [2006] provided a comparison of the two approaches which has been briefly summarized below:

- *The usefulness and computational efficiency of continuous time approach, either using global time points or unit specific events, strongly depends upon the number of time events. That is if a solution requires at least N event points, then use of fewer points will result in suboptimal solutions while use of greater points will result in significant and unnecessary computational effort. Since this number is a priori unknown therefore an iterative process is used whereas the number of event points is increased by 1 until there is not improvement in objective function. This means that scheduling problem needs to be solved a number of times which invariably leads to long computational times.*
- *As compared to their continuous time counterparts, the discrete-time approaches usually result in larger problem size, i.e. greater number continuous and binary variables. However, their simple model structure tends to significantly reduce the computational time requirements when a reasonable number of intervals is postulated (around 400 intervals usually appear as a tractable number).*
- *On the other hand, the complex nature of the continuous time approaches makes them useful for problems that can be solved with reduced number of event points (15 points may be the current upper bound)*
- *Discrete time models may generate better and faster solutions than continuous ones whenever the time discretization is a good approximation to the real data.*

Based on the above analysis, this study has adopted *discrete-time approach* for the purpose of problem formulation. In the following section, a detailed analysis of the existing frameworks is carried out, keeping in mind the objective of integrating the scheduling of site utility system with that of production plant.

III.2 FRAMEWORKS FOR BATCH PROCESS SCHEDULING PROBLEMS

The aim of a general scheduling framework is two fold: The discrete time approach consists of:

- First, develop a graphical presentation of the production process (recipe and plant topology)
- Then, based on this graphical presentation, build up a generic mathematical model which can be used to determine the production scheduling.

The objective of this section is to analyze the existing frameworks which are generally used to solve MILP batch scheduling problem. The frameworks considered in this section are recipe networks, state task networks (STN) and resource task networks (RTN). For the simplicity purposes, an illustrative example is presented at first which is then recalled during the explanation of the different frameworks.

III.2.1 Illustrative Example

As described earlier, a batch scheduling problem involves three key elements: process recipe, plant topology and market demands [Reklaitis *et* al., 1997].

The illustrative example presents a batch production plant which produces three finished products according to demands placed by market. To meet the electricity and heat utility demands, a site utility system based upon combined heat and power (CHP) production is employed. The details of the batch plant and the site utility system are given below.

III.2.1.1 Product recipe

According to product recipe, four feeds (*A*, *B, C* & *D*) are converted into four intermediate products (*HotA*, *IntBC*, *IntBC* & *ImpurP2*) and three finished products (*P1, P2* & *P3*). The product recipe consists of six process operations, which are explained below:

Preheating

Heat feed A for 1 hour.

Reactions

Reaction R1: Mix 50% hot A and 50% feed B and let them react for 1 h to form intermediate AB.

Reaction R2: Mix 40% of intermediate AB and 60% of feed C and let them react for 1 h to form intermediate BC (75%) and impure P2 (25%).

Reaction R3: Mix 70% of intermediate BC and 30% of feed D and let them react for 1 h to form intermediate AB (10%) and product P3 (90%). The intermediate AB is recycled for reaction R2.

Reaction R4: Mix 80% hot A and 20% feed D and let them react for 2 h to form product P1.

Separation

Impure P2 is distilled to obtain pure P2 in the distillate and product B in the bottom product. The recovery ratio of pure P2 is equal to 85 %. Product B is then recycled back for reaction R1

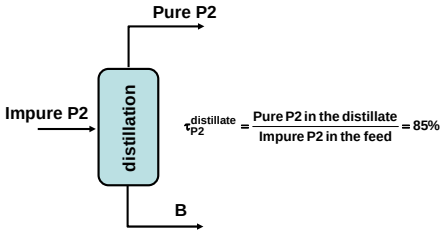

Figure III.5: Separation of impure P2 into pure P2 and B

III.2.1.2 Plant topology

To achieve this product recipe, four process equipments (Heater, Reactor 1, Reactor 2 & Separator) are used. The reactions R1, R3 and R4 can take place in Reactor 1 while reactions R2, R3 and R4 in Reactor 2. The heating and separation can take place in heater and separator respectively. The plant topology (layout) is shown in figure III.6.

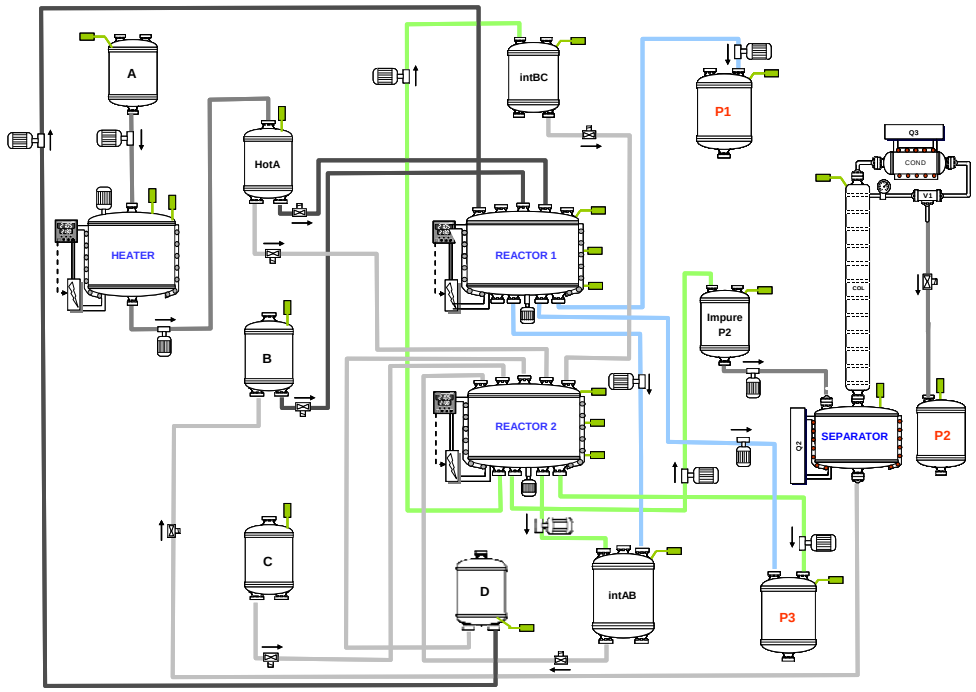

Figure III.6: Plant topology

Equipments

Available processing equipment capacity:

- Heater: 100 kg
- Reactor 1: 80 kg
- Reactor 2: 50 kg
- Separator: 200 kg

It is assumed that the maximum capacity of the processing equipment is based on the feed having the maximum molar volume.

Available storage capacity:

- For feeds A, B, C: unlimited
- For hot A: 100 kg
- For intermediate AB: 200 kg
- For intermediate BC: 150 kg
- For impure P2: 100 kg
- For products 1, 2 & 3: unlimited

Utility requirement

- Heating: 0.75 tons/hr.kg of HP steam
- Reaction 1: 0.25 tons/hr.kg of LP steam
- Reaction 2: 0.50 tons/hr.kg of MP steam
- Reaction 3: 0.25 tons/hr.kg of MP steam and 10 KW/kg of electricity
- Reaction 4: 0.50 tons/hr.kg of LP steam
- Separator: 5 KW/kg of electricity

III.2.1.3 Market

A key factor which influences the operations of a batch plant is the demands of each product. The market imposes the nature, the quantity and the timing of the finished products that are produced by the batch plant. Two situations can occur:

- If the product demands are stable and they can be reliably forecasted then the planning horizon is long and plant can be run in *campaign mode*. In this case, all plant resources are dedicated to a small subset of products over a long period of time. A cyclic pattern of operations is established and many identical batches of same product(s) are produced in sequence.
- If reliable forecasting can not be established then production is only driven by the available orders. This results in shorter planning horizon and consequently leads to short-term scheduling problem.

In this study case, short-term scheduling is undertaken in which demand pattern changes from one period to another.

III.2.1.4 Combined Heat and Power (CHP) based site Utility System

A typical CHP based site utility system comprises of fuel and water storage repositories, boilers for high pressure steam production, steam turbines for electricity generation, valves for reducing pressure and a pumping mechanism to recycle water (as shown in figure III.7). The CHP based utility system considered for this study is based on the model proposed by Soylu *et* al. [2006]. The boiler consumes fuel to transform water into HP steam. HP steam is converted into MP and LP steam by using multistage turbine or by using pressure release valves (PRVs). The advantage of using turbine is that it not only reduces pressure but also simultaneously generates electricity. The pump signifies the whole system which allows conversion of exhaust steam into water (using cooling towers, etc) and then, recycles the water back to water repository.

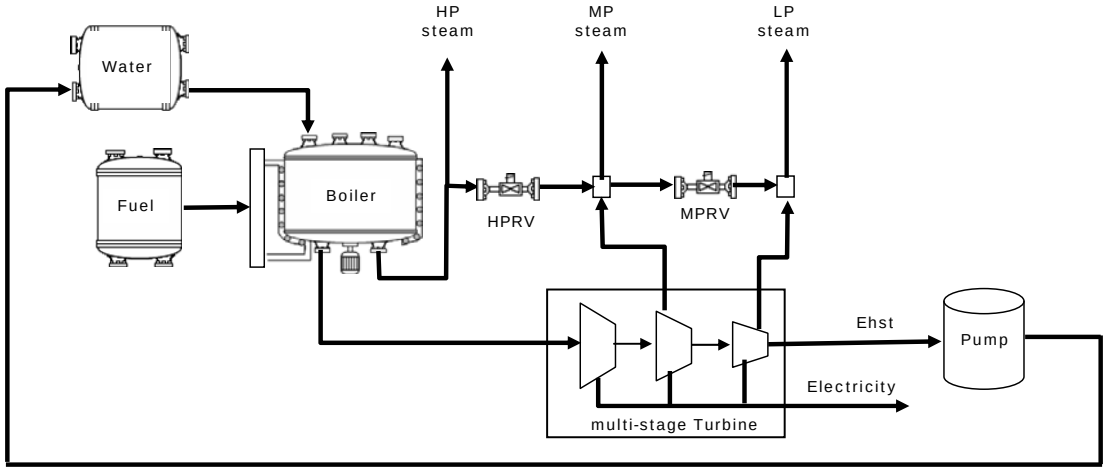

Figure III.7: Typical CHP based site Utility System

The stages of turbines are represented as *turbine 1*, *turbine 2 & turbine 3*. The whole functioning of the multistage steam turbine is presented in figure III.8. The *High Pressure steam* comes into the first stage of turbine where it expands and ultimately leaves as medium pressure turbine. This *Medium Pressure steam* then enters the second turbine stage and leaves as low pressure steam. Finally the *Low Pressure steam* enters the third stage of turbine and exits at a very low pressure. This exhaust steam is above the saturated steam level but it is not fit to meet the process requirements of the production plant.

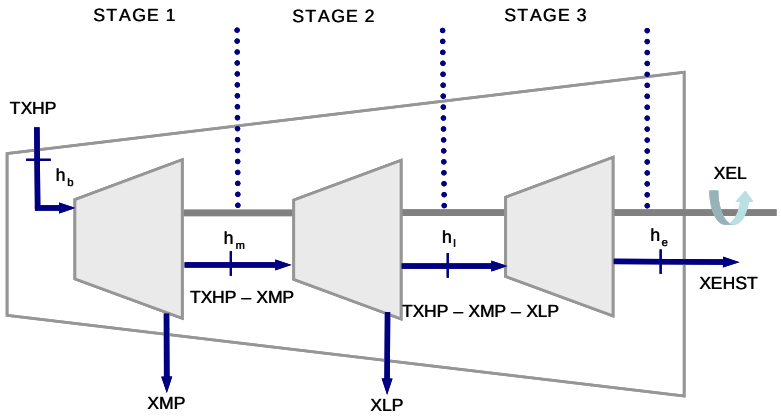

Figure III.8: Functioning of a multistage turbine

After each stage, some quantity of medium pressure (MP) and low pressure (LP) steams are extracted from turbine to meet steam demands of the manufacturing unit. Another source for meeting MP and LP steam demands is by expanding steam through pressure release valves: a HPRV to expand HP steam and MPRV to expand MP steam.

In the CHP plant utilities such as HP, MP, LP and Ehst steam can not be stored. Therefore material storage only happens in case of fuel and water. In this study, it is assumed that water and fuel is in sufficient quantity to last for duration of scheduling horizon.

The available equipment capacities of the site utility system are given below:

- Normal boiler operation: 200 tons/h
- Restart boiler operation (water hold up): 15 tons
- HPRV : 200 tons/h
- MPRV : 200 tons/h
- Turbine stage 1 : 200 tons/h
- Turbine stage 2 : 200 tons/h
- Turbine stage 3 : 200 tons/h
- Pump : 200 tons/h

III.2.2 Recipe in an Industrial Perspective

Definition

Recipe is an entity comprising of minimum set of information that clearly define all the requirements for manufacturing a specific product. The recipe elucidates the products and how to make them [IEC, 1997].

In the case of processes consisting of a large number of processing equipments or elaborated manufacturing routines, the recipe can quickly become very complex. To establish a standard approach to address the complexity of the managing batch processes, the standard ISA/SP88 (www.isa.org) proposes a hierarchical model of the recipe (figure III.9).

As shown in figure III.9 the recipe is divided into five hierarchical categories:

- The *header*, which includes administrative information (username, author, etc).
- The *formula* that shows the list of raw materials and intermediate products required and their proportion (in percentage) and applicable operating conditions.
- Requirement of the number and type of processing *equipment*.
- The *procedure* defines the order of unit operations to accomplish the desired finished product.
- Specific *information* on the manufacturing constraints such as quality and safety.

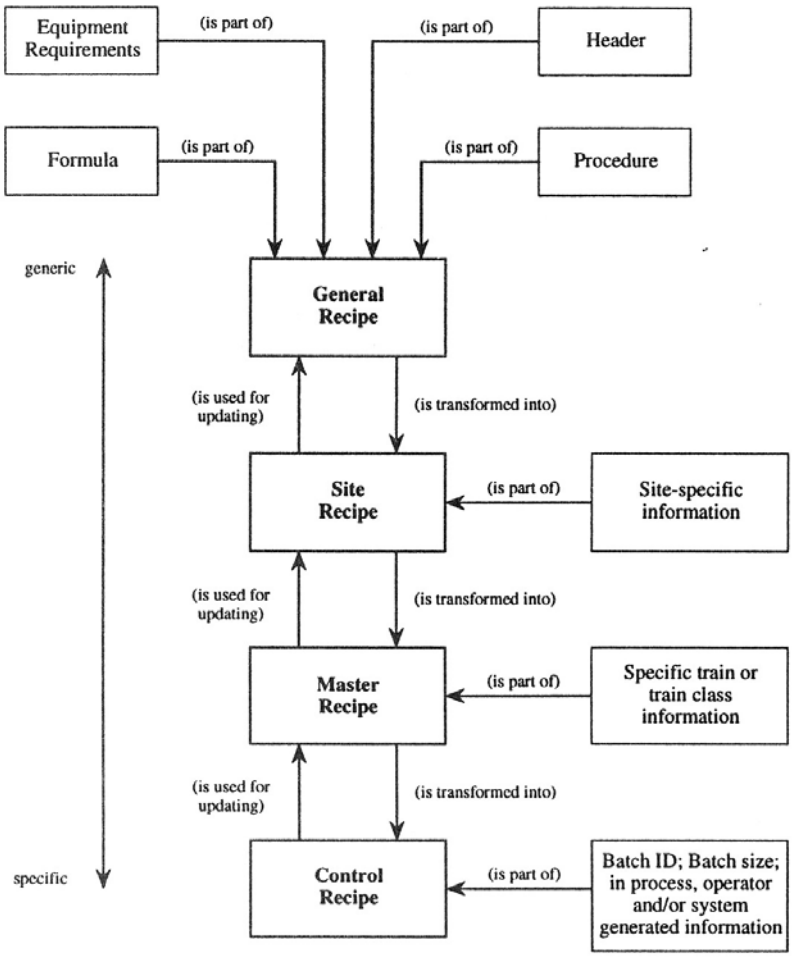

Figure III.9: Hierarchical structure of recipe

Moreover, as management of the industrial unit involves different decision levels, the content of the recipe needs to be described in appropriate granularity. Thus, in perspective of industrial sector, several levels of recipe have been identified:

- *Generic (or general) recipe* specifies the method of manufacturing the finished product. It contains the details about the materials (raw materials and intermediate products), proportions, operating parameters, etc. However, no detail about the equipment used in the production process is provided.
- *Site recipe* site is an instantiation of the generic recipes in which the details about the production site is identified. This essentially involves the clearly classifying the processing equipment characteristics (capacity, energy consumption, etc) and general topology of the process.
- *Master recipe* is an instantiation of the recipe site which sets the type and amount of finished product(s) to be produced in a given operational regime. It therefore clarifies the production orders to be achieved. This level of recipe makes use of scheduling, which calculates the number and size of each batch and the sequence of passage of these consignments on equipment.
- *Control recipe* is applied to a particular lot/batchsize and describes in detail the implementation of each task. It is implemented at the level of supervision or at a pilot simulation of dynamic processes.

III.2.3 Recipe Network

Recipe Network represents the arrangements of tasks (chemical/physical steps) that must be executed to produce a finished product [Reklaitis, 1991; 1995]. They are similar to the flow sheet representation of

continuous plants. However, rather than describing the plant layout, they focus on the process. Each task of the Recipe Network is represented by a square node, while the directed arcs between nodes represent task precedence. Each task node depicts various process information including the inputs, duration, equipment used, utility demands, outputs, etc. An arc not entering from a preceding task node represents feedstock while an arc not exiting into ensuing task represents finished products. The Recipe Network of the illustrative example consists of six tasks and is presented in the figure III.10.

The recipe networks are quite useful in handling the serial batch processing processes but their use in complex processing structures, like the one used in illustrative example, leads to considerable ambiguities. For example, it is not clear from recipe network whether:

- The reaction R2 produces two different products, forming the inputs of reaction R3 and separation respectively or there is one type of product which is then shared between reaction R3 and separation.
- The reaction R2 requires three different types of feedstock, one coming as feed while other two respectively produced by reaction R1 and reaction R3 or it only needs two types of feedstock, one coming as feed while other can be produced by either reaction R1 or reaction R3.

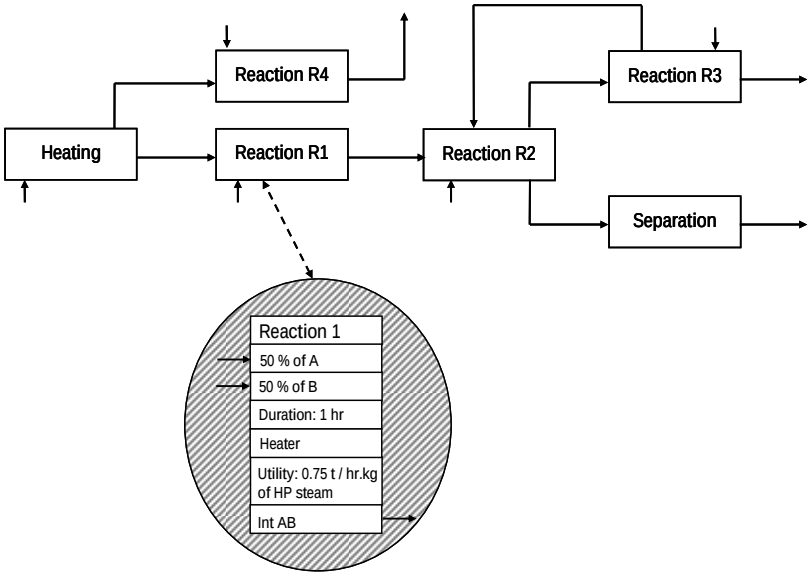

Figure III.10: Recipe Network of illustrative example

Both interpretations are equally plausible and this vagueness is a big hindrance in developing a general scheduling model using recipe networks.

III.2.4 State Task Network (STN) Framework

To remove the inherent ambiguities of the Recipe Networks, Kondili *et* al. [1993] developed another representation of the production recipe by proposing *State Task Network* (STN) framework.

III.2.4.1 Semantic element of STN framework

The distinctive characteristic of the *State Task Network* (STN) is that it is composed of two types of nodes; namely, the ***state*** and ***task*** nodes (see table III.2).

Table III.2: Semantic elements of STN framework

NAME	SYMBOL	EXPLANATION
Task node	Task Name *(Process Operation)*	***The task node*** represents a processing operation which transform material from one or more input states to one or more output states.
State node	State Name	***State node*** represents feeds, intermediate and final products
Arc	→	***Arc*** represents the flow of material from a state to task node and vice versa. The arrow head on the end of arc always shows the direction of flow.

State task networks are free from the ambiguities associated with recipe networks. Figure III.11 shows two different STN structures, both of which correspond to the last three processing operations of recipe network (reaction R2, reaction R3 and separation). In the STN structure represented in figure III.11a, reaction R2 produces two different products forming the inputs to reaction R3 and separation, respectively. Then, reaction R2 needs two feedstocks, one coming from feed while other can be produced by either reaction R1 or reaction R3. On the other hand, in the process shown in figure III.11b reaction R2 produces only one product which is then shared by reaction R3 and separation. Furthermore, reaction R2 requires three different feedstocks provided by feed, reaction R1 and reaction R3 respectively.

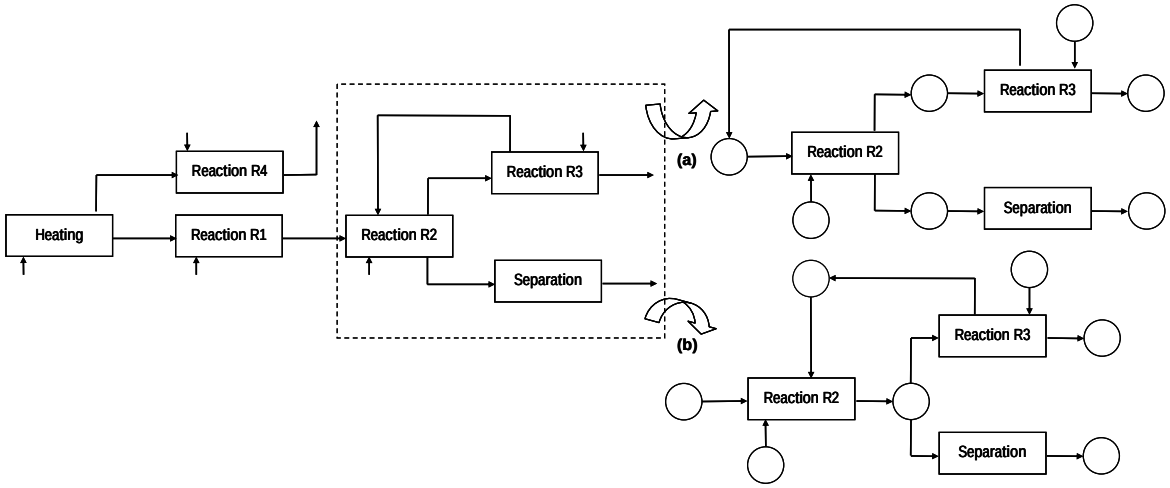

Figure III.11: Two different STN from the same Recipe Network

III.2.4.2 Rules for constructing STN representation

The STN is equally suitable for representing all types of production processes: continuous, semi-continuous or batch. To construct STN representation of the production process, one needs to obey the following rules:

Rule 1:

The arcs represent flow of material from a state to a task and vice versa.

In developing the graphical representation, the natural flow of the production process from left to right is guarded. The arrow heads attached to arcs represent the flow of material.

Rule 2:

A task has as many input/output states as different types of input/output material.

For example, in figure III.12a, a single input material $State_A$ is transformed into a single output material $State_B$. In figure III.11b, the N states I_1 to I_n are transformed into M output states O_1 to O_M.

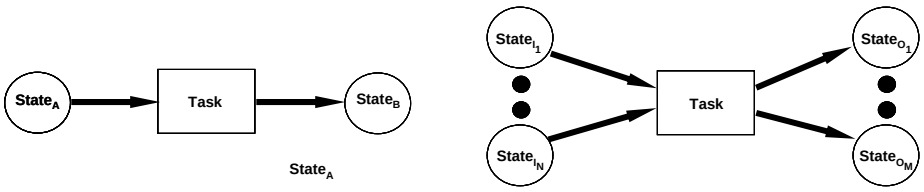

(a) Production task with single input and single output material state

(b) Production task with multiple input and multiple output material states

Figure III.12: Single or multiple input(s) and output(s) of a task

Rule 3:

A task receives material from its input states in fixed and known proportions of its batchsize and dispatches material to its output states also in fixed and known proportions.

In the production plant, a processing operation must comply with various chemical and physical constraints. One of the key constraints is the composition of the input into and output from the processing operation. Hence, the amount of material entering into and leaving the task are predefined by the production recipes. The *fraction of a state consumed or produced by a task, if not equal to one, is given beside the arc* linking the corresponding state and task nodes (figure III.13).

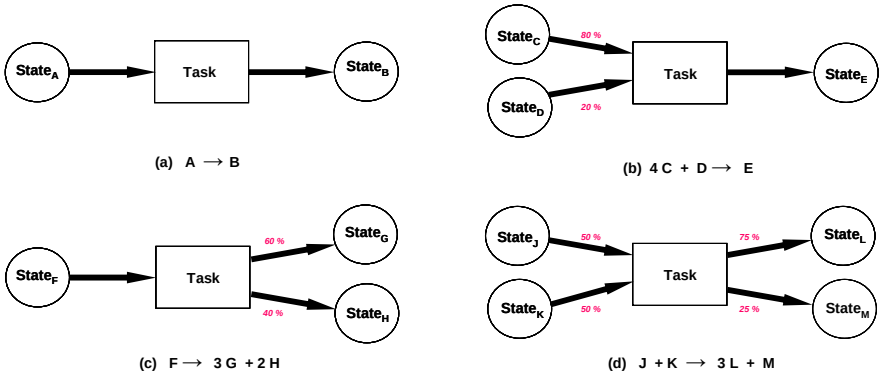

Figure III.13: Priori known proportion of inputs and outputs based on batchsize

Rule 4:

The sum of all stream proportions entering the task must be equal to 100%. Similarly the sum of all the stream proportions leaving the task must be 100%.

The processing operations can not act as storage stations. Hence, in the production plant, the objective of process operations is only to transform input material state(s) into output material state(s). For example, if the processing operation in figure III.14 undertakes batchsize of 10 moles, then it will require 7 moles (70%) of

$state_N$ and 3 moles (30%) of $state_O$ as input. In return, the processing operation will in return produce 6 moles (60%) of output $state_P$ and 4 moles of output $state_Q$.

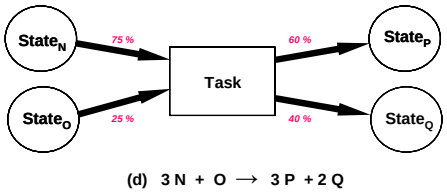

Figure III.14: The sum of all stream proportion entering and leaving a task is always 100% respectively

Rule 5:

A state can have multiple input streams as long as they are of same quality. If different quality streams need to be mixed then this would constitute another task.

All the streams entering into a state must have the same quality. For example, figure III.15a presents a scenario where two tasks produce output streams of same quality i.e., 'Hot A'. Thus, both streams can enter into the state node.

On the other hand, figure III.15b presents a scenario where the output streams from the tasks are of different quality. Output stream of $task_1$ is '*Hot A*' and output stream of $task_2$ is '*A*'. While stream '*Hot A*' enters into the material state, the stream '*A*' needs to undergo another task (process operation) to change its quality to '*Hot A*'. Figure III.15c presents this process in which the stream '*A*' first enters a material $state_A$ and then goes through transformation process task3 to be heated before entering the material $state_{Hot\ A}$. The figure III.15d simply demonstrates that any number of streams can enter into a state as long as they are of same quality.

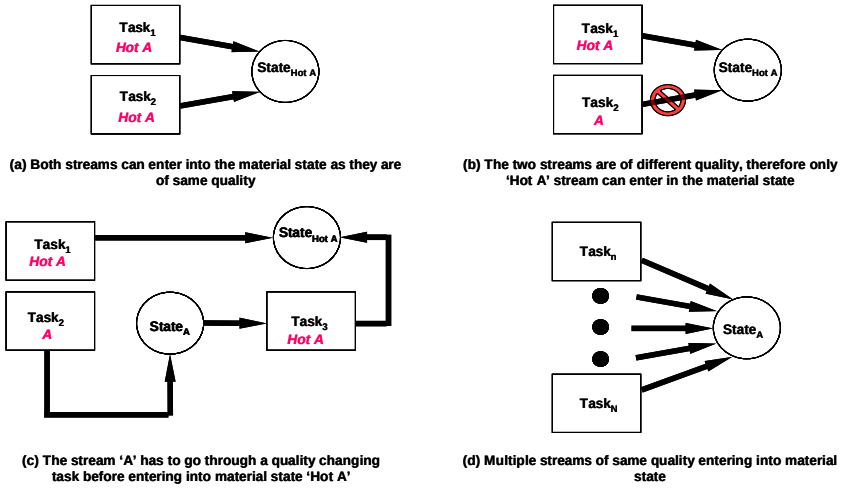

Figure III.15: Only streams of same quality can enter into state node

Rule 6:

If necessary, a state can be associated to a storage station where material can be stored.

The state node not only receives and provides material to a task but it may also act as a place for storing material. Moreover, each state is able to receive material from an external source and to deliver material to an external source.

III.2.4.3 STN representation of the illustrative example

The figure III.16 presents the STN representation of the production plant and CHP based site utility system described in the illustrative example.

(a) Production plant

The STN representation of production plant comprises of:

- 6 task nodes representing process operations of heating, reaction R1, reaction R2, reaction R3, reaction R4 and separation.
- 11 state nodes representing 4 raw materials (*A, B, C* & *D*), 4 intermediate products (*HotA*, *IntBC*, *IntBC* & *ImpurP2*) and 3 finished products (*P1, P2* & *P3*).

(b) CHP plant

The STN representation of CHP plant comprises of:

- 5 task nodes representing process operations of boiling, HP steam expansion, MP steam expansion, LP steam expansion and pumping of exhaust steam back into the water reservoir.
- 5 state nodes representing 1 raw material water, 3 intermediate products (HP, MP and LP steam) and 1 finished product (Exhaust steam).

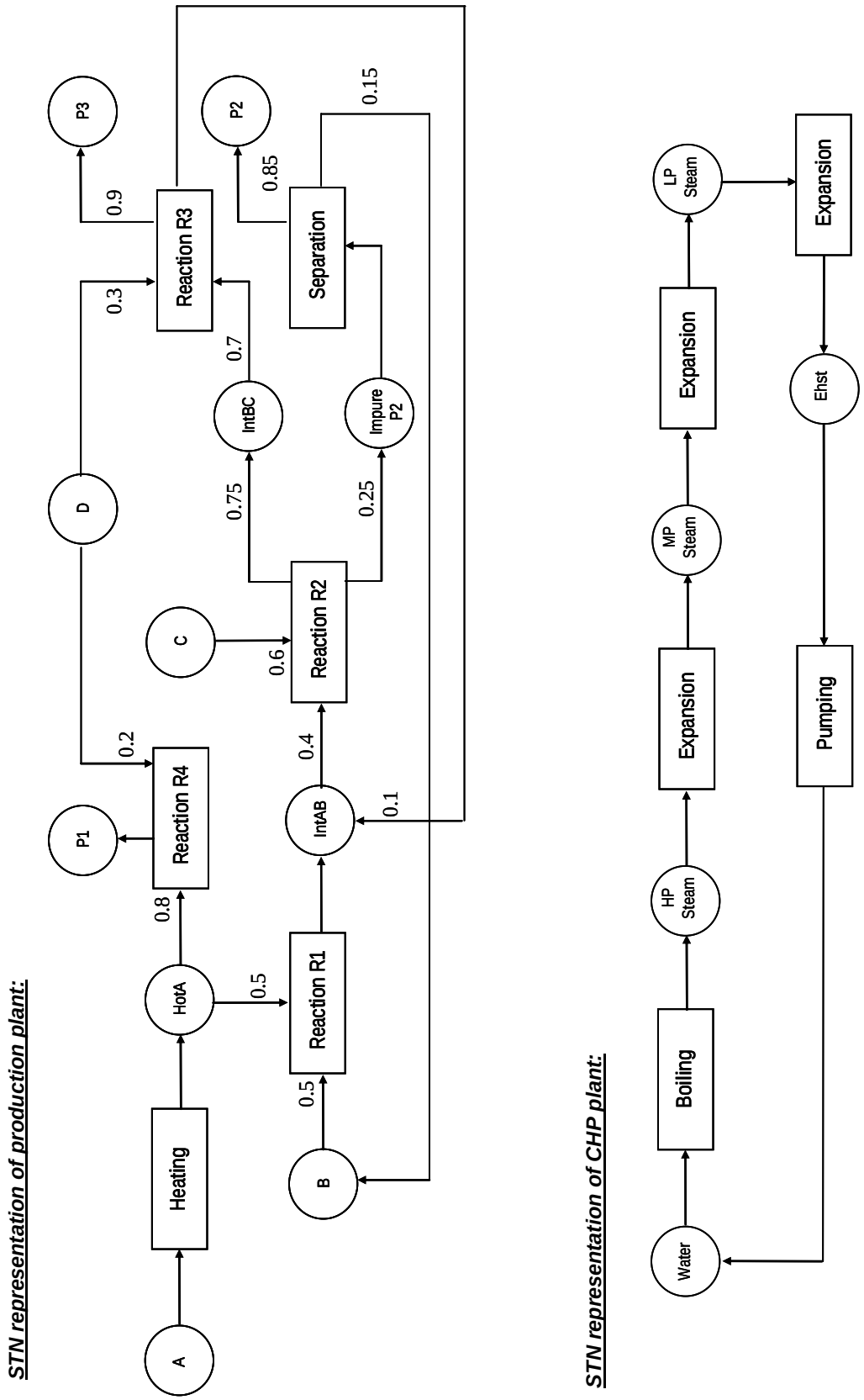

Figure III.16 : STN representation of each plant of the illustrative example

III.2.4.4 Mathematical modeling using STN framework

A representative general mathematical formulation of the scheduling problem must satisfy various constraints that are common in all scheduling problems. The following four constraints are the fundamental to all scheduling problems:

1. Allocation constraints that resolve the conflicts on the availability of processing equipment and in case of multi-tasking equipment, also determine the nature of task to be performed by the equipment at a given time period.
2. Capacity limitations of the processing equipments and storage stations.
3. Mass balances.
4. Limited availability of the utilities needed by processing equipment to perform a task.

(a) Subtleties involved in discrete time modeling

Before looking at mathematical formulation, certain nuances involved in discrete time modeling needs to be highlighted. As mentioned earlier, the first step is to divide the time horizon of interest into time periods of equal duration. Afterwards, two types of variables, namely *decision* and *state* variables are used to perform the mathematical modeling.

Definition

Decision variable is an unknown independent quantity that the model needs to determine. The decision variables have a notion of time duration associated with them and therefore can not be measured by simply using event points. The unknown quantities in this case of industrial plant include allocation of equipment, determining batchsizes, etc.

State variable are the numerical values that give account of the operating points of the system being modeled. They are dependent quantities whose numerical value is determined by the decision variables. The state variables are synonymous with a single moment in time and therefore the event points are sufficient for their calculation.

An example of state variable is the amount of stock stored in a storage tank that can be measured at any instant in time. As example of decision variable is processing equipment takes a certain batchsize of the raw material, processes it for a certain length of time and then produces the finished product. Both occupancy of the processing equipment the processing times involve notion of time duration and therefore, these tasks can not be modeled using event points.

Due to this significance of *time duration,* the points of reference in discrete time modeling are the **time periods** and not the boundary intervals. Figure III.17 demonstrates that the decision variables need to evaluated using time periods while state variables can be evaluated at the boundary points of these time periods.

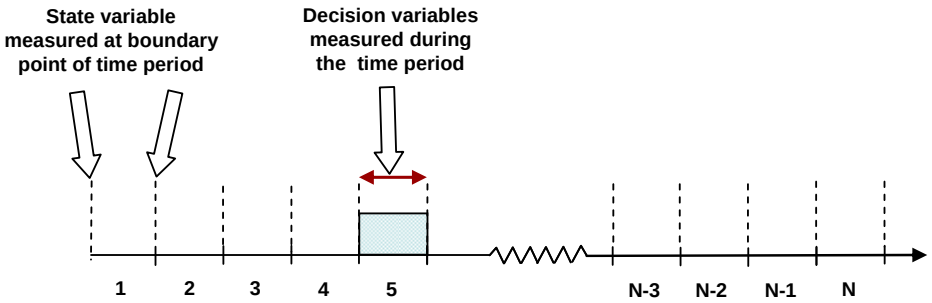

Figure III.17 : Decision and state variables

(b) Additional assumptions for mathematical modeling

Along with the concept of different nodes developed in STN framework, some additional assumptions are needed to develop a representative mathematical formulation. These assumptions are as follows:

1. It is possible to use linear equations and binary variables for modeling the behavior of main components of industrial unit. This means that a Mixed Integer Linear Programming (MILP) can be accurately used to solve the scheduling problem.
2. The mathematical formulation is based on discrete time representation. The time horizon is divided into T time intervals of equal duration. Hence, the time horizon under consideration is $t = 1,..,T$.
3. As a consequence of using discrete time representation, all events only occur at boundary intervals. These events can be:
    - The start or end of a task.
    - The allocation or the availability of a resource (processing equipment)
4. All data are deterministic and fixed over the time horizon of interest.
5. No pre-emptive operation is allowed, i.e., once a task is started, it can not be interrupted.
6. The processing times of all the tasks are known and independent of batch size.
7. The transfer of material from task to states and states to task is instantaneous.

(c) Mathematical model

The general mathematical formulation [Kondili *et.* al, 1993] based on STN framework that addresses the above mentioned key constraints are as follows:

(1) Allocation Constraints

To define the state of a processing equipment j: active (performing a task) or idle, an allocation variable $W_{k,j,t}$ is introduced.

Definition | $W_{k,j,t} = 1$ if a task k is launched during time period t,
$W_{k,j,t} = 0$, otherwise.

At a given period t, a processing equipment j can at most initiate one operation. The allocation variable is then constrained by equation [Eq. III-1]:

$$\sum_{k \in K_j} W_{k,j,t} \leq 1 \qquad \forall j \in J, \forall t \in 1,..,T \qquad \text{[Eq. III-1]}$$

In addition, if a task k is launched in period t then the processing equipment j shall no longer be available for the period $t' = t+1$ till the period $t' = t + p_k - 1$ (which corresponds to the duration of the task). This can be expressed by equation [Eq III-2], where M is a sufficiently large positive number:

$$\sum_{k \in K_j} \sum_{t'=t}^{t+p_k-1} W_{k',j,t'} - 1 \leq M(1 - W_{k,j,t}) \qquad \forall j \in J, \forall t \in 1,..,T \qquad \text{[Eq. III-2]}$$

The use of so called "big-M constraints" requires hefty number of equations and results in a significantly large integrality gap. Shah *et* al. [1993] introduced a new constraint which makes use of full backward aggregation thereby taking into account all the aspects present in the equation [Eq. III-2].

$$\sum_{k \in K_j} \sum_{\substack{t'=t-p_k+1 \\ t>0}}^{t} W_{k,j,t'} \leq 1 \qquad \forall j \in J, \forall t \in 1,..,T \qquad \text{[Eq. III-3]}$$

In addition, it is implicitly assumed that all tasks must release the allocated processing equipment when they finish. This means that the processing units are not allowed to be used as temporary storage devices.

(2) Operational and capacity Constraints

Equation [Eq. III-4] represents the production capacity of processing equipment. The batch which starts to be processed by task k in processing equipment j during time period t is bounded by the maximum and minimum capacities of the processing equipment.

$$W_{k,j,t} V_{k,j}^{\min} \leq B_{k,j,t} \leq W_{k,j,t} V_{k,j}^{\max} \qquad \forall k \in K, \forall j \in J, \forall t \in 1,..,T \qquad \text{[Eq. III-4]}$$

Definition

$B_{k,j,t}$: amount of material (batchsize) being undertaken by task k in unit j during time period t

$V_{k,j}^{\min}$: minimum capacity of processing equipment j when performing task k

$V_{k,j}^{\max}$: maximum capacity of processing equipment j when performing task k

Equation [Eq. III-5] represents the storage limitation of all states. The amount of material stored in a state s should never exceed its maximum storage capacity.

$$0 \leq S_{s,t} \leq C_s^{\max} \qquad \forall s \in S, \forall t \in 1,..,T \qquad \text{[Eq. III-5]}$$

Definition

$S_{s,t}$: amount of material stored in a state s at the beginning of time period t

$C_s^{\max}$: maximum storage capacity of state s

(3) Material mass balance around production states

Equation [Eq. III-6] represents the mass balance across all states. The net increase in the amount of material stored in a state s during time period t depends on the difference between the quantity of material entering and leaving the state. Furthermore, the initial stocks S_{0s} are supposed to be known and no task k is launched before period $t > p_k$

$$S_{s,t} = S_{s,t-1} + \sum_{k \in K} \rho_{k,s}^{prod} \sum_{j \in J} B_{k,j,t-p_k} - \sum_{k \in K} \rho_{k,s}^{cons} \sum_{j \in J} B_{k,j,t} + In_{s,t} - Out_{s,t} \qquad \forall s \in S, \forall t \in 1,..,T \qquad \text{[Eq. III-6]}$$

Definition

$\rho_{k,s}^{cons}$: proportion of state s consumed by task k

$\rho_{k,s}^{prod}$: proportion of state s produced by task k

$In_{s,t}$: import into the state s from an external source at period t

$Out_{s,t}$: export from the state s to an external source at period t

The equation [Eq. III-6] not only includes the material produced and consumed by input and output tasks respectively but also allows the import and export of material from external state. The export of the material is important as it signifies the delivery of finished product from state s at time period t.

As mentioned in figure III.17, the state variables can be measured at boundary points of the time period. However, this leads to two possibilities:

- Measure state variables at the beginning of the time period
- Measure state variables at the end of the time period

In this study the state variables will be measured at the beginning of the time period. The equation [Eq. III-6] also follows this principle whose application can be explained by using the following simple example.

Example

A material state A is produced by task T_1 and consumed by task T_2. The amount of the material stored in state A at time period 1 is 200 kg and batchsizes of task T_1 and T_2 are given in the figure III.18. It is assumed that state A neither receives any input from external source nor dispatches any output to external source.

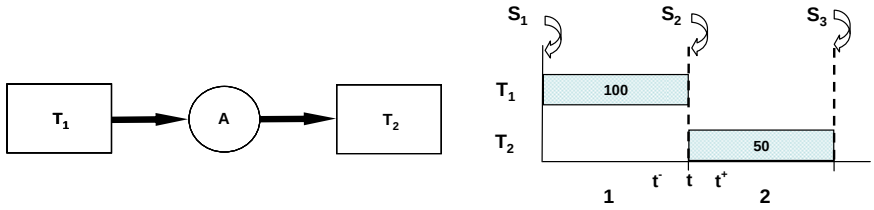

Figure III.18 : Measuring state variables at beginning of the time period

The material mass balance for the state A is determined at point t^+ and not at point t^-. That is at the start of period 2 rather than at end of period 1. Hence, applying equation [Eq. III-6] at the start of period 2 on state A leads to the following result:

$$S_{A,2} = S_{A,1} + B_{T_1,1} + B_{T_2,2}$$
$$= 200 + 100 - 50$$
$$= 250$$

(4) Utility Constraints

To perform a task *k*, the processing equipment *j* consumes utilities (e.g. steam, electricity, cooling water etc.). The demand of each subset of utility can vary over duration of the task. Furthermore, at any given time, the amount required may be constant or may depend on the batchsize.

Equation [Eq. III-7] quantifies the requirement of utility subset *u* at period *t*. It is assumed that the amount of utility *u* required by task *k* over an interval θ from the start of the task is given by the combination of a constant ($\alpha_{u,k,\theta}$) and a variable term ($\beta_{u,k,\theta}$). The total demand $U_{u,t}$ for utility *u* over time period *t* by assortment of task is given by:

$$U_{u,t} = \sum_{k} \sum_{j \in J_k} \sum_{\theta=0}^{p_k - 1} \alpha_{u,k,\theta} \cdot W_{k,j,t-\theta} + \beta_{u,k,\theta} B_{k,j,t-\theta} \qquad \forall u \in U, \forall t = 1,...,T \qquad \text{[Eq. III-7]}$$

The maximum amount of utility *u* available during period *t*, is bounded by the equation [Eq. III-8]:

$$0 \le U_{u,t} \le U_{u,t}^{\max} \qquad \forall u \in U, \forall t = 1,...,T \qquad \text{[Eq. III-8]}$$

Definition

$U_{u,t}$: total demand for utility *u* during time period *t*

$\alpha_{u,k,\theta}$: fixed demand factor of utility *u* by task *k* at time θ relative to start of task

$\beta_{u,k,\theta}$: variable demand factor of utility *u* by task *k* at time θ relative to start of task

$U_{u,t}^{\max}$: maximum amount of utility available during period *t*

III.2.4.5 Limitations of STN framework

STN was the first general framework developed for the representation and the formulation of process scheduling problem. The STN framework covers various process scheduling problems and takes into account many features requisite for successful industrial applications. However, the STN framework is rather restrictive and lacking in some key features.

First of all, the STN representation concentrates solely on the process recipe and does not contain necessary information regarding plant topology, i.e., indicating the processing equipment in which tasks are executed. To cover this weakness, the mathematical model treats each item of processing equipment as distinct entity and takes into account their limited availability (by using allocation constraint). However, the fact remains that STN framework does not provide true physical picture of the production plant. Moreover, characterizing processing equipment separately tends to be inefficient in production processes involving many identical items. Thus on the basis of above discussion it can be inferred that **STN framework rests at the level of generic recipe.**

Secondly, according to Pantelides [1994] "*the STN framework treats various resources (materials, processing equipment, utilities, etc) in a non-uniform manner. This non-uniformity creates the following negative consequences:*

- *A relatively large number of different classes of constraints must be introduced in order to describe resource utilization (see. the basic formulation of Kondili et al. [1988, 1993]).*
- *Taking account of the features of novel types of process scheduling problems often necessitates the formulation of novel types of specialized constraints (see Pantelides et al. [1992]).*
- *Establishing alternative or extended mathematical formulations (e.g., employing more detailed models of the operation of individual processing tasks, or describing uncertainty in resource availability) is rendered problematic by the need to take into account of many different special cases."*

Finally, in the STN framework, limited availability of utility is incorporated either as a scheduling resource constraint or as a term in objective function. This is not adequate as *utility* is essentially a resource that needs special consideration. The special characteristic of utility is magnified even more in case of a site utility system as it couples the production plant with the CHP plant. The use of task (process operations) and state (material) nodes may be sufficient to deal with resources classically considered in the process scheduling problems (processing equipment or operators) but they are inadequate in handling the utility resource. For example, figure III.19 presents a joint representation of the production plant and the CHP plant. However, the use of task and state nodes is inadequate for displaying interaction between the two plants. This interaction could only be incorporated by using utility as an additional resource; a notion that is not present in the STN framework. Thus, it can be concluded that STN framework can not be used to integrate the distinct functions of the production plant and site utility system.

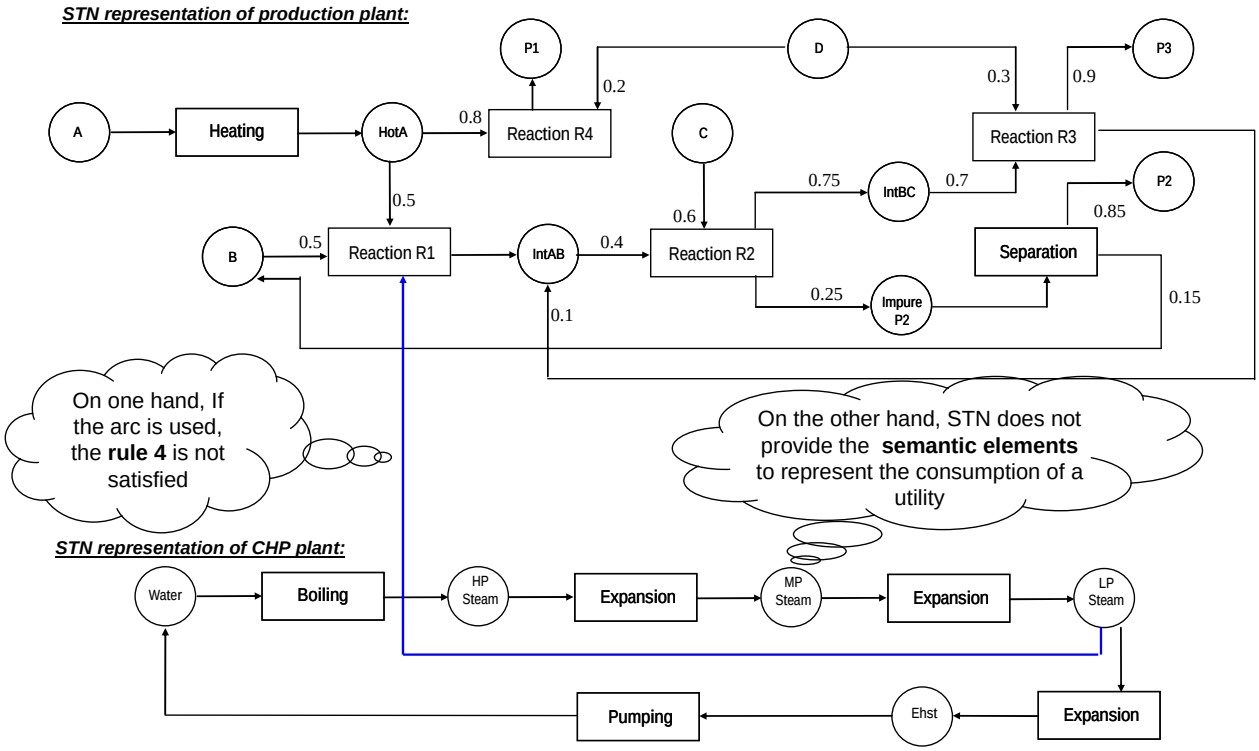

Figure III.19 : Missing semantic elements in STN representation

III.2.5 Resource Task Network (RTN) Framework

Pantelides [1994] developed *Resource Task Network* (RTN) framework that resulted in more generic and efficient discrete time scheduling framework. Resource Task Network (RTN) representation is essentially a bipartite graphs composed of two types of nodes: resources and tasks. The main distinguishing feature of RTN framework is that it treats all resources in a uniform manner.

Table III.3: Semantic elements of RTN framework

NAME	SYMBOL	VARIABLES	REPRESENTS
Task node	Task *k* $(V_k^{min}, V_k^{max}, p_k)$	V_k^{min} : minimum batchsize V_k^{max} : maximum batchsize p_k : processing time	Processing operation that consumes and / or produces a specific set of resources.
Resource node	Resource Name $(R0_r, C_r^{max})$ Resource name	$R0_r$: initial amount of resource *r* C_r^{max} : maximum storage capacity of resource *r*	The concept of resource is entirely general and includes all entities that are involved in the production process, such as materials (raw materials, intermediates and products), processing equipment (tanks, reactors, etc.), utilities (water, steam, etc.) and manpower. The original framework used circles to represent all types of resource. Later on an ellipse node was added to represent processing equipments and manpower while circle node represents material and utility resources.
Arcs	x% ------>	x : batchsize proportion when not equal to one given beside the arc	The original framework used 'solid arc' to represent all types of resource entering or leaving a task node. Now the 'solid arc' is only used to represent linkage of utility and material resources with the task node. Not present in the original framework but added later on to simplify graphical representation. The 'dashed arc' represents link between task node and unary resources (processing equipment and manpower).

III.2.5.1 Rules for constructing RTN representation

The RTN representation primarily uses the same rules (rule 1-5) for its construction as proposed in the STN representation. However, these rules are only valid for material resources and do not take into account

other resources such as utilities, manpower and processing equipments. Hence, the following additional rules are proposed for constructing of RTN representation:

Rule 7:

In addition to materials, other resources and their interactions with the tasks are also included in the network.

For example, figure III.20a presents a RTN representation of a production process that transforms 65% of material *A* and 35% of material B into material *C*. The production process is executed in processing equipment *J1*. Furthermore, this operation requires *x* kg/hr of HP steam and the contribution of operator 1. The graphical representation of RTN framework has evolved over the years and for sake of simplification the resource node is sub-divided into a circle node representing materials and utilities, and ellipse node representing processing equipment and manpower. Furthermore the original RTN framework used the same kind of arc to show interaction between the processing tasks and the resources. However over the years, for the sake of graphical clarity, the RTN framework started using a separate kind of arc to represent the interaction between the processing tasks and unary resources like processing equipment and manpower. Figure III.20b presents this evolved RTN representation that is widely used today.

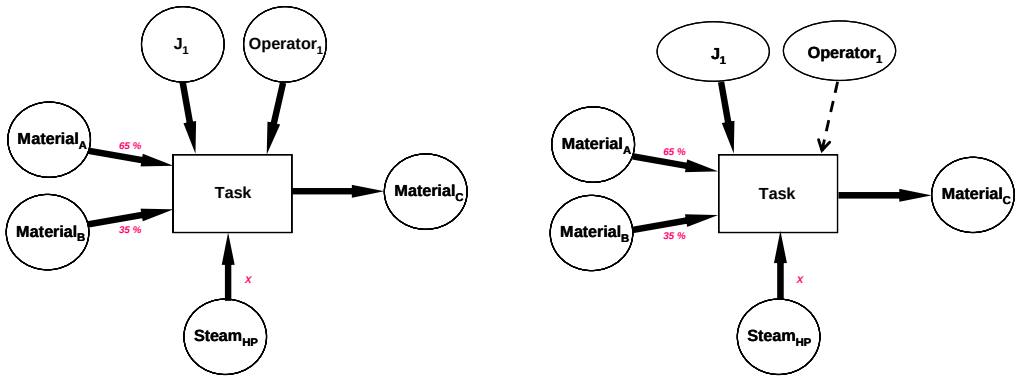

Figure III.20: RTN representation of a chemical reaction

Rule 8:

In contrast to STN framework, use of alternative sets of resources is always represented by equivalent number of distinct tasks even if the same transformation of material is involved. Hence, N alternative sets will result in *N* distinct tasks.

The RTN framework explicitly shows all resources necessary for the execution of a task in the graphical presentation. This visible demonstration invokes some interesting issues in case of identical equipments, i.e., multiple processing equipments executing the same transformation process. The STN framework wholly concentrates on the type of task (production process) without taking into account the number of processing equipment available for its execution. On the contrary, the RTN framework takes into account the number of processing equipments and thereby, same transformation process executed in different processing equipments appears as distinct tasks. For example, consider the preheating operation that uses High Pressure

(HP) steam to heat material resource A, which can be carried out in three different processing equipments (J_1, J_2 and J_3). Figure III.21a demonstrates the equivalent STN representation that uses a single task to represent the preheating process. On the other hand, figure III.21b exhibits the equivalent RTN representation where three tasks are used to represent the preheating process. The use of task duplication allows to explicitly demonstrate that the preheating operation can be carried out in three different equipments, an aspect which is not shown in STN representation.

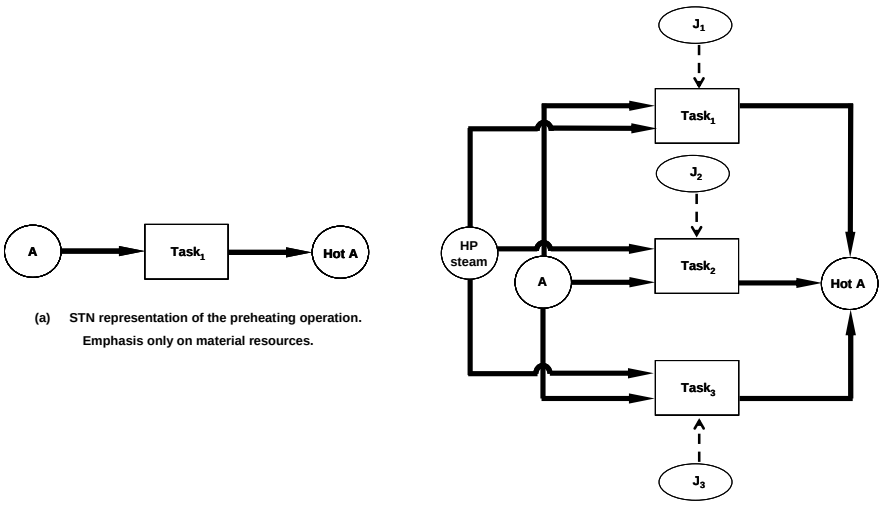

Figure III.21: Duplication of task in case of identical equipments

The application of above mentioned rule leads to the following corollary:

Corollary III.1: Processing equipment can be shared by several tasks but at a given time only one task can be performed by the processing equipment.

The processing equipment can carry out single or multiple tasks. In case where same processing equipment can execute multiple tasks, then each feasible task is connected to the processing equipment using distinct arcs. For example, in figure III.22a processing equipment *J1* can perform both $Task_1$ and $Task_2$. However, at a given time instance, the processing equipment *J1* would only be able to perform either $Task_1$ or Task.

In the case where same task requires be simultaneously operated by multiple equipments, then each processing equipment is connected to the designated task using distinct arcs. For example, in figure III.22b $Task_1$ needs to be jointly performed by processing equipments *J1* & *J2*.

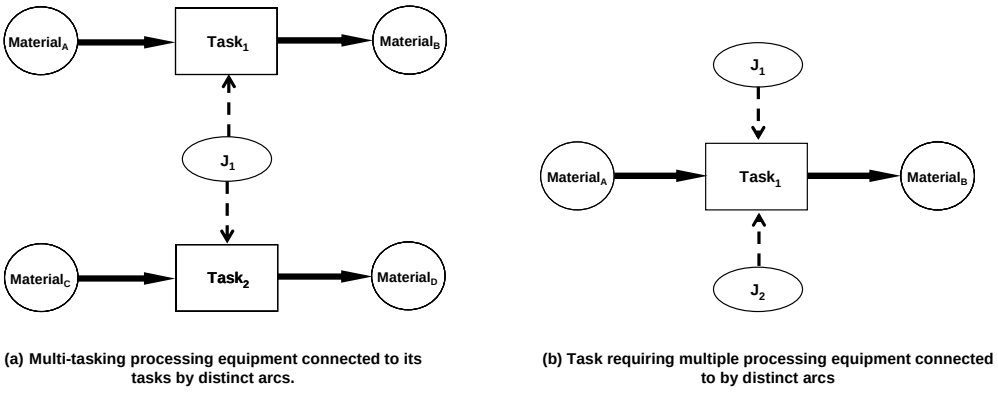

Figure III.22: Multi-tasking equipment can perform only one task at a given time

As mentioned in rules 7and 8 all the RTN representation presents all types of resources and their interactions with the processing tasks. However, this makes the graphical representation overloaded with arcs and nodes especially in case of identical tasks. To make RTN representation easier to understand some generalization are used. These are explained using figure III.23, which represents conversion of material A into material B using either processing equipment R1 ($Task_1$) or R2 ($Task_2$). Both processing equipments require utility HP_{steam} to perform the conversion of material A into material B.

The figure III.23a represents this process in totality. However, the RTN representation can be simplified by placing $Task_1$ and $Task_2$ next to each other and then use a single arc to show interaction of these tasks with material and utility resources as shown in figure III.23b. This simplification only holds true if tasks consume and produce the same amounts of material and utility resources.

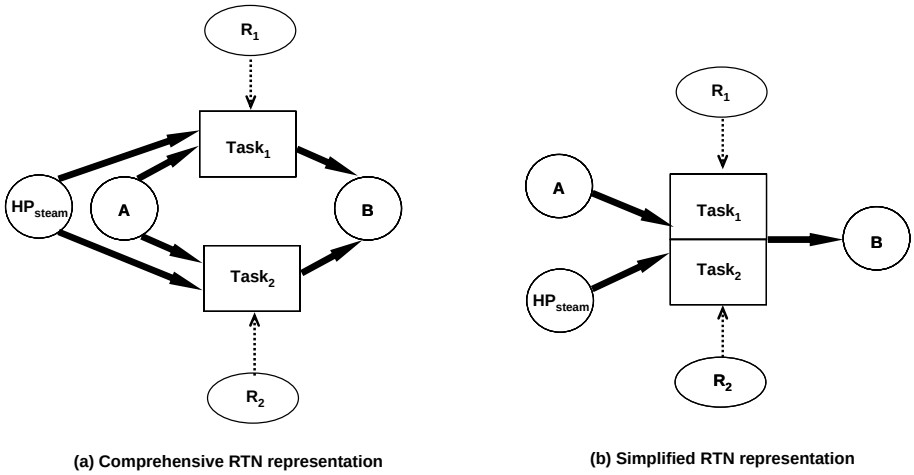

Figure III.23: Simplification of the RTN representation by placing identical tasks next to each other

The second simplification that will be extensively used in this study is the use of flag # to represent connection between two nodes (figure III.24). The use of flag is not part of semantic elements and was not presenting the original RTN representation. This study proposes the use of flags just to simplify connections between different nodes when they are located far from each other.

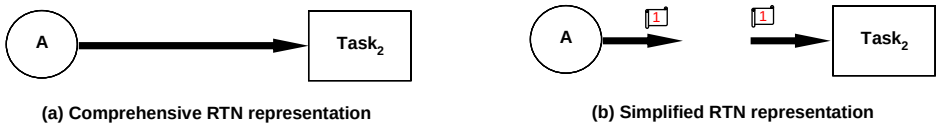

Figure III.24: Simplification of the RTN representation with the use of flags

III.2.5.2 RTN representation of illustrative example

The figure III.25 presents the RTN representation of the production plant and CHP based site utility system established in the illustrative example.

(a) Production plant

The RTN representation of production plant comprises of:

- 8 task nodes representing process operations of heating, reaction R1, reaction R2, reaction R3, reaction R4 and separation. The reactions R3 and R4 use task duplication (2 sets of replica tasks – T3 & T4 and T6 & 7) since they can take place in either reactor 1 or reactor 2.

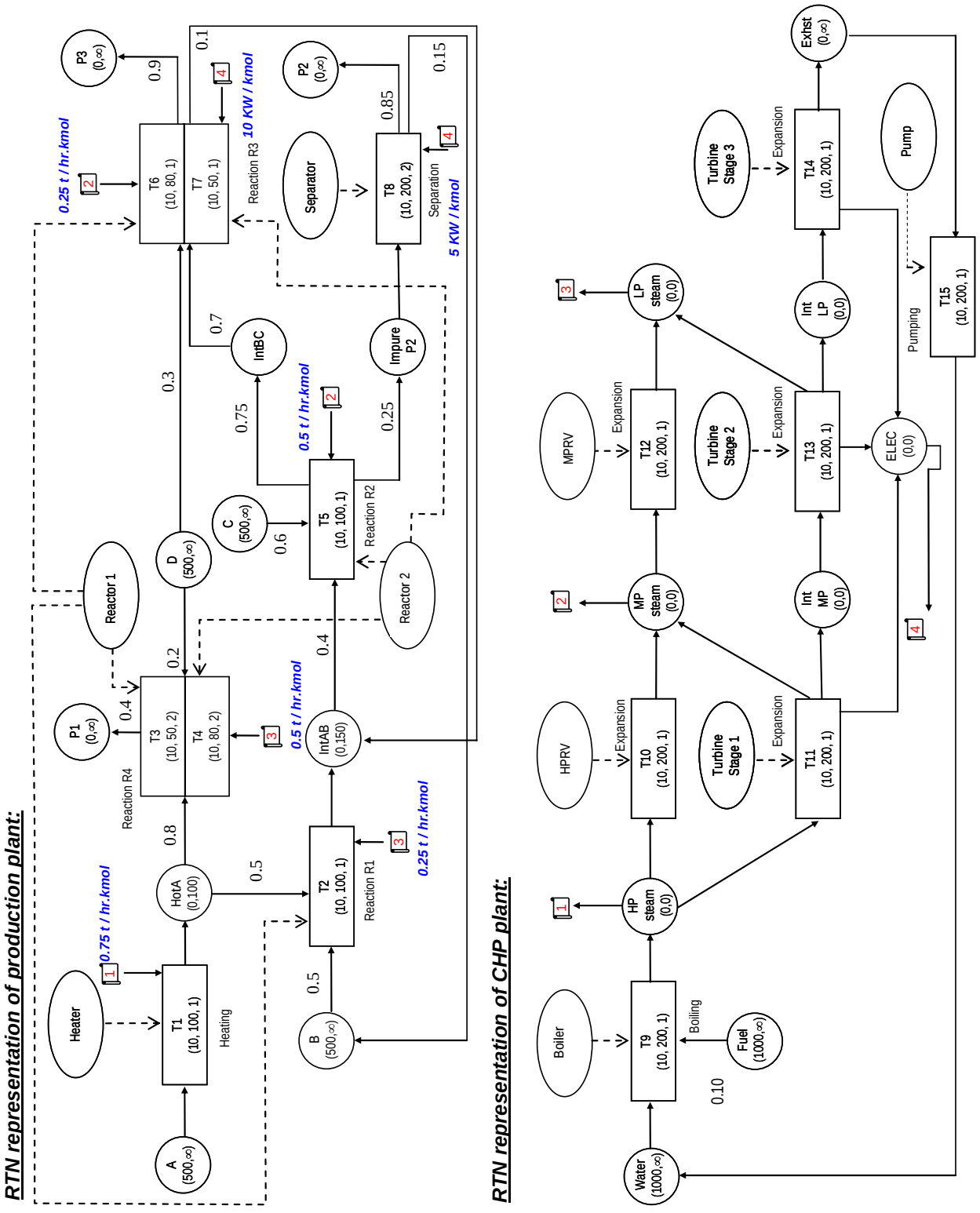

Figure III.25: RTN representation of the illustrative example

- 15 resource nodes :
  - 11 nodes representing material resources: 4 raw materials (*A, B, C* & *D*), 4 intermediate products (*HotA*, *IntBC*, *IntBC* & *ImpurP2*) and 3 finished products (*P1, P2* & *P3*).
  - 4 nodes representing equipment resources: Heater, Reactor 1, Reactor 2 and Separator.

(b) CHP plant

The RTN representation of CHP plant comprises of:

- 7 task nodes representing process operation of boiling, HP steam expansion through HPRV, HP steam expansion through turbine stage 1, MP steam expansion through MPRV, MP steam expansion through turbine stage 2, LP steam expansion through turbine stage 3 and pumping of exhaust steam back into the water tank
- 16 resource nodes :
  - 9 nodes representing material resources: water, fuel, HP steam, MP steam, Int MP steam, LP steam, Int LP steam, Exhaust steam and electricity.
  - 7 nodes representing equipment resources: Boiler, HPRV, Turbine stage 1, MPRV, Turbine stage 2, Turbine stage 3 and Pump.

(c) Distinguishing features of RTN from STN representation:

The distinguishing features of the RTN from its counterpart STN representation are as follows:

- Along with the material resources, the processing equipment and utility resources are also presented in the graphical representation.
- Task can be duplicated to highlight the number of resources available to perform a task (for example reaction R3 can take place either in reactor 1 or reactor 2. Hence T3 & T4 are identical tasks.
- The notion of resources allows for an explicitly display of interactions between the Production plant and the CHP plant. The utility resources (electricity, HP steam, MP steam and LP steam) generated in the CHP plant are then exploited by the Production plant.

III.2.5.3 Mathematical modeling of RTN framework

The treatment of all resources in a unified way allows for development of a more generic mathematical formulation. The general characterization of resources permits the use of simple resource balance, capacity and operational constraints to address all the representative constraints.

Along with the concept of different arcs and nodes (developed in rules 1 to 8), the RTN framework makes use of some additional assumptions to develop a representative mathematical formulation. These assumptions have already been mentioned in section III.2.4.4.

(a) Mathematical model

The mathematical model proposed by Pantelides [1994] in the RTN framework extensively uses two variables, one binary ($W_{k,t}$) and other continuous ($B_{k,t}$), to characterize the operation of a task k starting at time t. The amount of resource r produced or consumed at time t' relative to start of task k at time t is characterized by a combination of two terms $\Phi_{k,r,t'} \cdot W_{k,t-t'}$ and $\nu_{k,r,t'} \cdot B_{k,t-t'}$:

- The first term $\Phi_{k,r,t'} \cdot W_{k,t-t'}$ is a fixed term depending on the task activation.
- The second term $\nu_{k,r,t'} \cdot B_{k,t-t'}$ is a variable term depending on the batchsize.

(1) Resource balances

Equation [Eq. III-9] expresses in terms of the variables $R_{r,t}$ the fact that the availability of resource r changes from one time interval to the next one due to the interactions of this resource both with active task k and with the environment. The $R_{r,0}$ corresponds to the amount of resource r that is available initially, and is assumed to be known:

$$R_{r,t} = R_{r,t-1} + \sum_{k \in K} \sum_{t'=0}^{p_k} \left(\Phi_{k,r,t'} \cdot W_{k,t-t'} + \nu_{k,r,t'} \cdot B_{k,t-t'} \right) + \prod_{r,t} \qquad \forall r \in R, \forall t \in 1,..,T \qquad \text{[Eq. III-9]}$$

Definition

$R_{r,t}$: the amount of resource r available during time period t

$\Phi_{k,r,t'}$: fixed proportion of resource r produced (positive value) or consumed (negative value) by task k at time t' relative to start of task

$\nu_{k,r,t'}$: variable proportion of resource r produced (positive value) or consumed (negative value) by task k at time t' relative to start of task

$\Pi_{r,t}$: defines the amount of resource r provided by an external source (positive number) or supplied to an external source (negative number) during time period t.

The resource balances used in equation [Eq. III-9] can be explained using the following simple example.

Example

Problem statement:

Consider an exothermic reaction k carried out in reaction vessel (reaction duration 5 hours), which converts 50 kg of material A completely into material B. The reaction starts at beginning of time period 2 and finishes at the end of time period 6. During the first hour of operation the reaction uses 0.5 kg/s of steam per kg of material being processed and for the rest of process duration, requires 2 kg/s of water per kg of material being processed. The vessel is in idle state before time period 2 and after time period 6.

RTN representation:

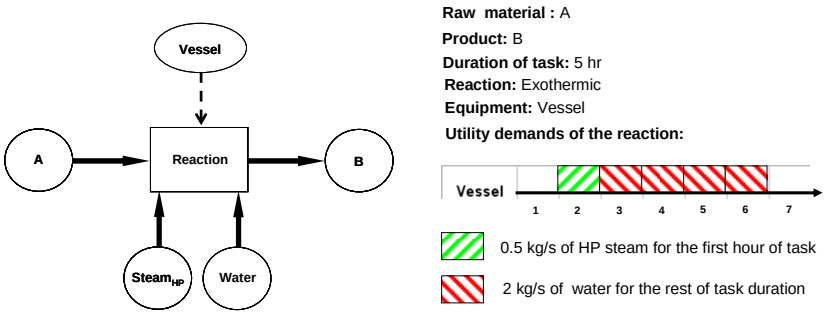

Figure III.26: RTN representation and other schematics of the example under consideration

Assumption:

1. *The time discretization period for RTN framework is of one hour.*
2. *No input or output from the environment i.e. $\Pi_{r,t} = 0$.*

Given:

The initial values of resources are as follows:

Material A = 100 kg; Material B = 20 kg; $Steam_{HP}$ = 100 kg/s and Water = 200 kg/s

Solution:

The principle of the equation [Eq. III-9] is that when the resources are consumed by task they attain (negative value) and at the end of task, they are released (positive value).Hence, the values of parameters $\Phi_{k,r,t'}$ and $\nu_{k,r,t'}$ are given in table II.4 and table II.5 respectively.

Table III.4: Matrix values for $\Phi_{k,r,t'}$

Resource \ Time (t')	0	1	2	3	4	5
A	0	0	0	0	0	0
B	0	0	0	0	0	0
Vessel	-1	0	0	0	0	1
$Steam_{HP}$	0	0	0	0	0	0
Water	0	0	0	0	0	0

Table III.5: Matrix values for $v_{k,r,t'}$

Resource \ Time (t')	0	1	2	3	4	5
A	-1	0	0	0	0	0
B	0	0	0	0	0	0
Vessel	-1	0	0	0	0	1
$Steam_{HP}$	-0.5	0.5	0	0	0	0
Water	0	-2	0	0	0	2

Example

At the beginning of time period 2, the task reaction k "consumes" material A, reaction vessel and amount of HP steam utility. One hour later, time period 3, the task "produces♣" an amount of steam utility and "consumes" an amount of cooling water. Finally, at the end of time period 6, the task "produces" an amount of material B, reaction vessel and amount of cooling utility. The quantity of resources A, B, $Steam_{HP}$, Water and vessel are given in the figure below:*

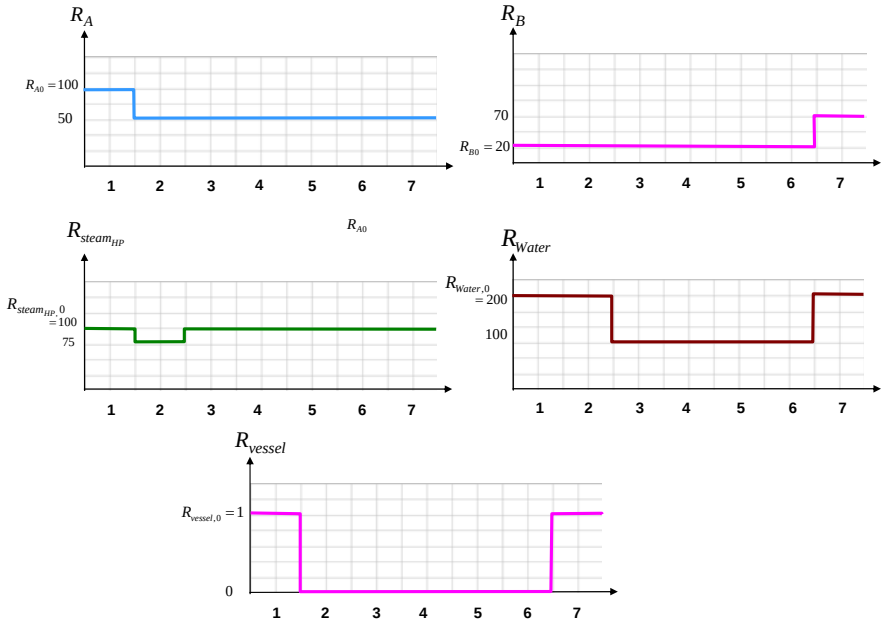

Figure III.27: Evolution of resource balance (note figure not drawn to scale)

* The term "consume" can also be interpreted as "engage" or "seize"

♣ The term "produce" can also be interpreted as "disengage" or "release"

Example

Equation [Eq. III-9] sets an initial threshold for each resource (R_{r0}). Then, simple mass balance is carried out at each discrete period t. The RTN framework assumes that quantity of available resource like utility, processing equipment and manpower is constant all over the time horizon. For equipment and manpower resources the initial value of parameter is always equal to one. As the unary resource, (vessel in this example) is "seized" the value of variable $R_{r,t}$ becomes equal to zero. At the end of task, the resource is released and the value of $R_{r,t}$ returns to initial value of one. Similarly, the utility resources (steam and water) are "seized" at the start of task and are "released" at the end of task.

However, the case of material resources is slightly different. The processing operations transform the input raw material into output product. Therefore, the raw material (in this case material A) is only "consumed" without being "produced" at end and the product (in this case material B) is only "produced" without being "consumed".

(2) Resource capacity constraint

The amount of resource *r* at any given time period can not be negative. Moreover, the maximum availability of a resource is limited by an upper bound constraint. This leads to the following constraint:

$$0 \le R_{r,t} \le R_{r,t}^{\max} \qquad \forall r \in R, \forall t \in 1,..,T \qquad \text{[Eq. III-10]}$$

In case of unary resources like processing equipments and manpower, the maximum capacity is always equal to 1.

(3) Operational constraint

The operational constraints restrict the minimum and maximum batchsize that can be undertaken by processing equipment *j*. The batchsize limitations depend on the size of respective equipments and can simply be written as :

$$W_{k,t}V_{k,r}^{\min} \le B_{k,t} \le W_{k,t}V_{k,r}^{\max} \qquad \forall k \in K, \forall r \in R_k^J, \forall t \in 1,..,T \qquad \text{[Eq. III-11]}$$

Definition

$R_{r,t}^{\max}$: maximum availability of resource *r* during time period *t*

R_k^J : set of processing equipment resources *j* used by task *k*

III.2.5.4 Strengths of RTN Framework

Compared to STN framework, RTN framework improves the graphical presentation as well as the mathematical formulation. Integrating utility, processing equipment and manpower along with material resources results in a graphical representation which is closer to the real manufacturing unit. Since plant topology is completely incorporated in RTN framework, it can be considered to be at **site recipe level** in terms of industrial recipe.

Actually, just as the same recipe networks can lead to several STN representations, similarly the same STN representation can lead to several RTN representations. Appendix-A clearly shows how the three different plant topology who share the same recipe results in a unique STN representation and three different RTN representations. Hence, it can be concluded that even though STN framework removes ambiguities, it still fails to explicitly demonstrate the impact of plant topology; an aspect clearly illustrated by RTN framework.

In the mathematical formulation, the main difference between STN and RTN framework lies in the *resource balance constraint*, which is more generic in the RTN based formulation. An additional advantage of the resource balance constraint (equation [Eq.III-9]) is implicit imposition of allocation constraint, thereby

enforcing that in multi-tasking processing equipment, at most one task can be executed during a particular time period. Hence, unlike STN based formulation, there is no need to explicitly enforce the allocation constraints (equation [Eq.III.3]). Moreover, the RTN formulation introduces a single binary variable instead of the multiple binary variables used in the STN formulation. This results in smaller linear programming relaxation as well as reduced integer degeneracy in solution of MILP. For example, for solving the illustrative example, the RTN formulation uses three times less binary variables ($W_{8,t}$ as compared to $W_{6,4,t}$). Hence, it can be concluded that unified treatment of all resources in RTN framework leads to simpler and more efficient mathematical formulation.

III.3 CONCLUSION: TOWARDS A NEW FRAMWORK FOR HANDLING UTILITIES IN INTEGRATED BATCH PRODUCTION SCHEDULING

The last section clearly established the superiority of RTN framework over its counterpart STN framework. However, when it comes to the handling of utilities, even the RTN framework has limiting features. In the RTN framework, utilities are assumed to be supplied by independent external sources in *limited* and *known* quantities. The general assumption is that the quantities of available utilities are constant (see figure III.28).

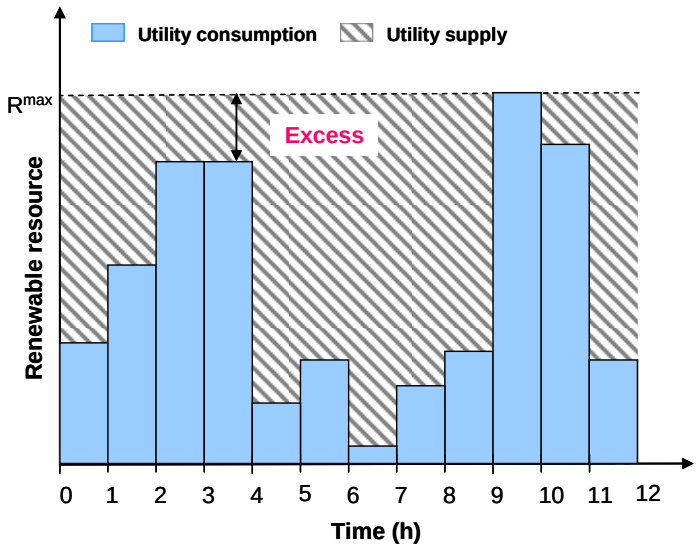

Figure III.28: Consequence of assuming utility as a renewable resource

This is a very restrictive assumption especially in the case where the industrial unit employs a site utility system. In such industrial units, the subset of utility generated depends upon operational regimes followed in these site utility systems (for example, use of multi-stage turbine will determine the production of not only electricity but also of MP and LP steam). Therefore, it seems judicious to include the short term operational planning of site utility systems into the overall scheduling model. This would allow utilities to be generated in *limited* and *variable* quantities.

In this context, RTN representation was used to demonstrate the interaction between the production plant and CHP plant of illustrative example. However, to represent the operational regime of the site utility system in a more realistic manner, it is necessary to address two aspects that are not featured in the RTN framework.

Firstly, certain tasks in site utility system, unlike their production unit counterparts, do not produce material resources in fixed priori known proportions of batchsize. For example, steam extraction from multi-stage turbine depends on the MP and LP steam demand of the production unit. The amount of steam

extraction at each turbine stage is variable and can take any value in between zero and bounded upper limit. In other words, $v_{k,r,t'}$ rather than taking fixed values becomes a variable. This distinct characteristic can not be met by the RTN framework as the resource balance constraint (equation [Eq. III.9]) would no longer be a linear equation.

Secondly, the basic hypothesis in RTN formulation is that tasks consume and produce resources at their beginning and ending times. This effectively means that in RTN formulation, there are two ways for defining the utility consumption: aggregate manner and refine manner. The aggregate manner accounts for the net utility consumption during the duration of a task while the refine manner entails the periodic requirement of utility during task duration. For example, processing equipment needs to consume 30 t/h of HP steam for three hours to execute a task. The aggregate manner of utility consumption will mean that the processing equipment will require 90 tons of HP steam which should be available at the start of the task (figure III.29a). On the other hand, the refine manner of utility consumption will require that 30 t/h of HP steam should be supplied at start each discrete period during task duration (figure III.29b). Thereby, 30 t/h of HP steam is provided at start of time period 4, 5 and 6. Evidently, the refine manner of utility consumption is closer to the real world environment. Actually, the task duration variable p_k in the *resource balance constraint* (equation [Eq.III.9]) implicitly favors the use of refine manner of utility consumption in RTN formulation.

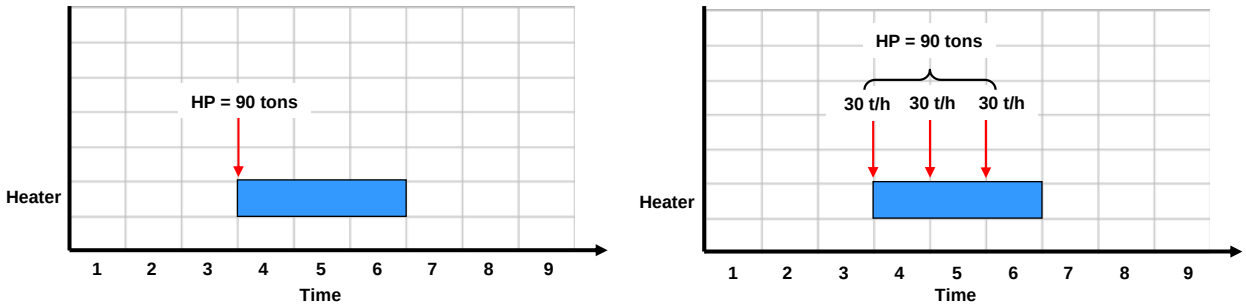

(a) Utility considered in aggregate manner **(b) Utility considered in refine manner**

Figure III.29: Utility considered in aggregate or refine manner

Nevertheless, despite using of refine manner, the RTN framework fails in synchronizing the tasks that generate utility with the tasks that consume utility. The utility consumption and production is essentially an instantaneous process; therefore, the utility being generated by utility system and consumed in production unit is a continuous process. Thus, instead of considering utility as discrete batches, they must be considered as instantaneous and continuous flows, a nuance that can not be treated by the generic nature of the *resource balance constraint*. This aspect can be better explained by recalling the illustrative example.

Example

Consider that production task T1 (performed by heater) and T3 (performed by reactor 1) require 30 t/h and 60 t/h of HP steam, which is provided by the boiling task T9 (performed by boiler). The desired scenario is presented in the figure III.30a where the start and finish of boiler task T9 coincides with the start and finish of the heater task T1 and reactor 1 task T3.

- *The heater task T1* performed during time period 4 consumes 30 t/h of HP steam. The boiler task T9 starts simultaneously during time period 4 (i.e. starting at beginning of time period 4 and finishing at end of time period 4) generating 30 t/h of HP steam.*

* It is assumed that steam generation in boiler is instantaneous; hence no start start-up operation is required.

Example continued

- *The reactor 1 task T3 starts at beginning of time period 6and finishes at end of time period 7 consuming 60 t/h of HP steam. To meet the HP steam demands, the boiler task T9 is launched twice, once at beginning of time period 6(finishing at end of time period 6) and then again at beginning of time period 7 (finishing at time period 7).*

However, in reality due to the above mentioned hypothesis, the RTN framework always results in slack of one time period between the boiler task T9 and heater task T1 and reactor 1 task T3 (figure III.27b).

- *The hypothesis imposes that 30 t/h of HP steam should be available at the beginning of heater task T1 (time period 4). This in result means that the boiler task T9 must have started generating 30 t/h of HP steam during time period 3 (i.e .starting at beginning of time period 3 and finishing at end of time period 3) .*
- *Similarly, to meet demand of 60 t/h of HP steam for reactor 1 task T3 at beginning of time period 6 and 7 the boiler task T9 must be launched twice. The first start is at beginning of time period 5 and second start at beginning of time period 6 with each the tasks finishing at end of period 5 & 6 respectively.*

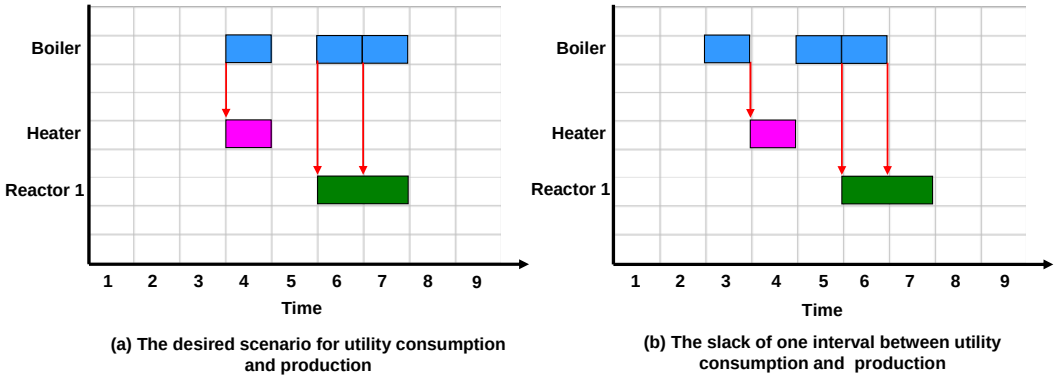

Figure III.30: Slack time in RTN framework

From the above discussion, it is evident that among the existing frameworks RTN is the most proficient for handling batch scheduling problem. However, RTN framework does not permit to synchronize the utility generation tasks (utility system operations) with the utility consumption tasks (production plant activities). Therefore, to apply the *integrated approach,* there is a need to develop a new framework, which would simultaneously undertake short-term scheduling of batch plant and operational planning of utility system in a single universal scheduling model.

The new framework proposed in the following chapter is an extension of the RTN framework and is duly called ***Extended Resource Task Network (ERTN)***. The ERTN framework adds new elements to the existing RTN framework thereby allowing it to handle specificities concerning utility production and consumption.

CHAPTER IV

EXTENDED RESOURCE TASK NETWORK (ERTN) FRAMEWORK

SUMMARY

A new framework called Extended Resource Task Network (ERTN) is developed to handle utilities in integrated batch production scheduling. The ERTN frameworks is composed of a graphical representation of the production process (including recipe and plant topology) and of a generic mathematical formulation built upon the basis of graphical representation.

The first section presents the semantic elements of the ERTN representation, which like its predecessor RTN framework is a bipartite graphical representation composed of nodes and arcs. However, in conjunction with the traditional resources and task nodes, different types of arcs are introduced in ERTN framework. These new arcs allow for a better handling of specificities related to utilities. The second section lays down the rules that are necessary for developing the ERTN framework. The third section presents a mathematical formulation which has a direct correspondence with graphical representation. Every entity in the graphical representation corresponds to a set of mathematical constraints, an aspect that can lead to development of a truly general purpose scheduling algorithm. .The fourth section develops the ERTN representation of the illustrative example presented earlier in section III.4.1. The final section of the chapter presents a brief conclusion on the advantages of the ERTN framework.

RESUME

Un nouveau formalisme nommé "Extended Resource Task Network" (ERTN) est développé pour permettre le traitement des utilités dans le cadre de l'ordonnancement des ateliers. Le formalisme ERTN est composé d'une représentation graphique du système de production (incluant la recette et la topologie) and d'une formulation mathématique générique construite à partir de cette représentation graphique. La première section introduit les éléments sémantiques du formalise ERTN qui, comme le formalisme STN et RTN est composée d'arc et de nœuds. Cependant, de nouveaux types d'arc sont introduits qui permettent une meilleure prise en compte des spécificités des utilités. La deuxième section énonce les règles régissant la construction du modèle ERTN d'un système donné. La troisième section développe ensuite le modèle mathématique associé à ce formalisme, ce modèle mathématique étant directement déduit de la représentation graphique. Chaque entité dans la représentation graphique correspond en effet à un ensemble de contraintes mathématiques. La quatrième section applique ce nouveau formalisme à l'exemple « fil rouge » présenté dans le chapitre précédent. Enfin, la dernière section conclue brièvement sur les avantages de ce nouveau formalisme.

IV.1 SPECIFIC FEATURES OF BATCH INDUSTRIAL UNIT

As explained in Chapter III, the main purpose of the ERTN framework is to enable handling of utilities in batch production scheduling. This section briefly highlights the specific features of batch industrial unit composed of a batch production plant and a site utility system.

IV.1.1 Batch Plant and Site Utility System: Heterogeneous Production Modes

A typical feature of total processing site is the heterogeneity of production mode where:

- The mode of functioning of production plant is discontinuous.
- The mode of functioning of site utility system is continuous with frequent changes in operating conditions from one time period to another.

To illustrate this fundamental aspect consider the following example.

Example

Consider a process reaction that completely converts material A into material B. The duration of the process reaction is 2 hr and it can take place either in reactor R1 (task T_2) or reactor R2 (task T_3). The HP steam requirement for the process reaction is 0.1 tons/hr per kg of material being processed. A boiler in the site utility system is employed (task T_1) to fulfill the HP steam requirement of the process reaction. The Gantt chart and the characteristic profiles of the production plant and site utility system are represented in figure IV.1.

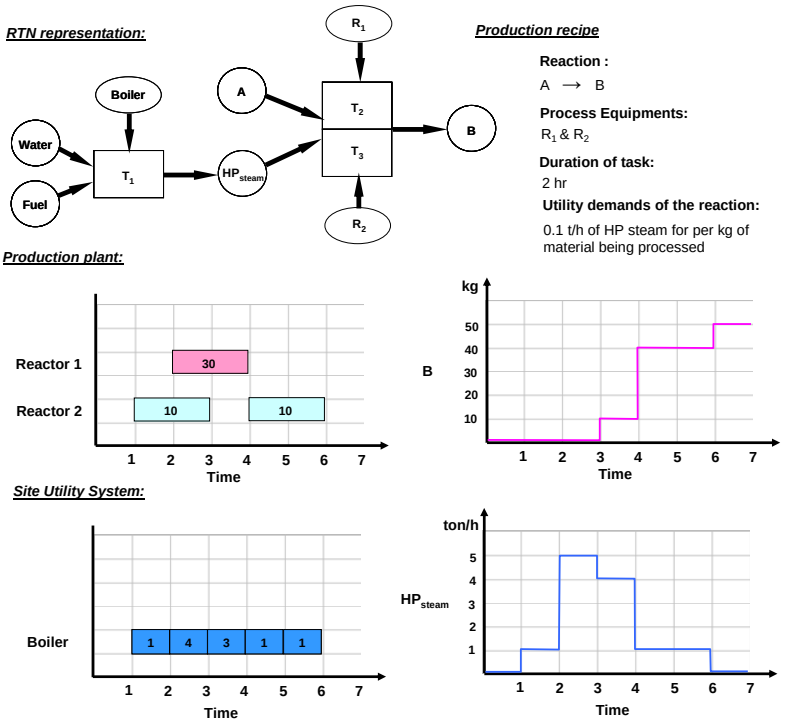

Figure IV.1: Simple example demonstrating heterogeneity of production mode in industrial unit

A task in production plant takes input from feed material resource(s), carries out the transformation process throughout the task duration and finally at end of task, delivers the product into the output material resource(s). For example, the reaction task T_3 in reactor 2 starts processing 10 kg of material A at start of time period 2 and produces 10 kg of material B at end of time period 3. Therefore the process operations of **batch production plant are**

discontinuous and the typical physical measure is amount of material.

Example

However, to perform these tasks, the processing equipments require a continuous feed of a single or a subset of utilities (e.g. simultaneous requirement of steam and electricity). This utility demand is satisfied by tasks in utility system that transforms instantaneously (i.e. without any time delay) the input utility resources into output utility resources. For example, to meet the HP steam demand of Reactor R1 (3 t/h) and Reactor R2 (1 t/h) during time period *3*, the boiler (task T_1) starts supply 4 t/h of HP steam start of time period *3* and continues this supply till end of time period *3*. Hence, the process operations of the site **utility system are continuous (with multiple operating points) and the typical physical measure is utility flows**.

IV.1.2 Duality of Water Derivative Resources

In an industrial unit, the different resources can be classified into two categories: the disjunctive resources and the cumulative resources (figure IV.2). The cumulative resources can then further be subdivided into material resources and utility resources.

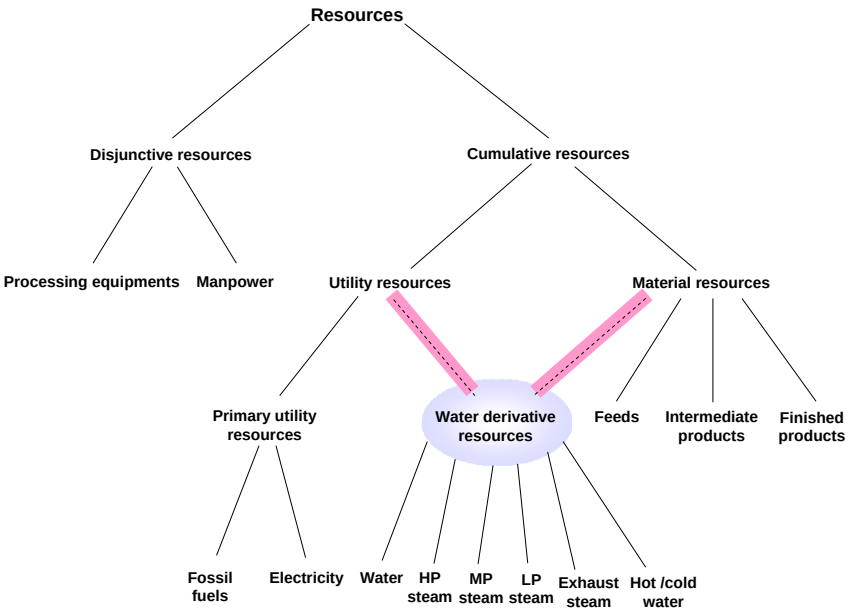

Figure IV.2: Breakdown of resources

A point of some delicacy in the ERTN framework is the treatment of the water derivative resources, which can be in form of either material resources or utility resources. Essentially all the water derivative resources can be treated as material resources for the processing tasks executed in the site utility system since they carry out phase transformation from one phase to another phase. Therefore, the ambient water (feed), steam at different pressure levels (intermediate products) and exhaust steam (residual product) all constitute material resources. However, the water derivative resources also fulfill the utility requirements of the processing tasks performed in the production plant. Hence, in this case, the water derivative resource acts as utility resource.

IV.2 SEMANTIC ELEMENTS OF ERTN REPRESENTATION

The ERTN framework introduces new types of arcs and enriches the notion of task that allows incorporating the features highlighted in the previous section:

- The non-uniform treatment of the resources.

- The heterogeneous production modes.

The semantic elements of the ERTN framework and their relevance are demonstrated in the following section and summarized in table IV.1.

IV.2.1 ERTN Task Node: Notion of Delivery Time (dd_k)

The task node represents a processing operation that consumes and/or produces a specific set of resources. The graphical representation of the task node remains the same as used in the RTN representation. However, a new parameter 'delivery time' is added to the traditional parameters capacity thresholds and processing time (figure IV.3).

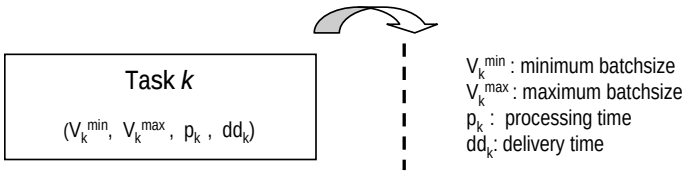

Figure IV.3: Representation of a task node in the ERTN framework

Definition

The *delivery time* is a parameter which expresses the elapsed time between the arrival of feed stream and the delivery of output stream.

The notion of delivery time can be explained using the example given in section IV.1.1.

Example

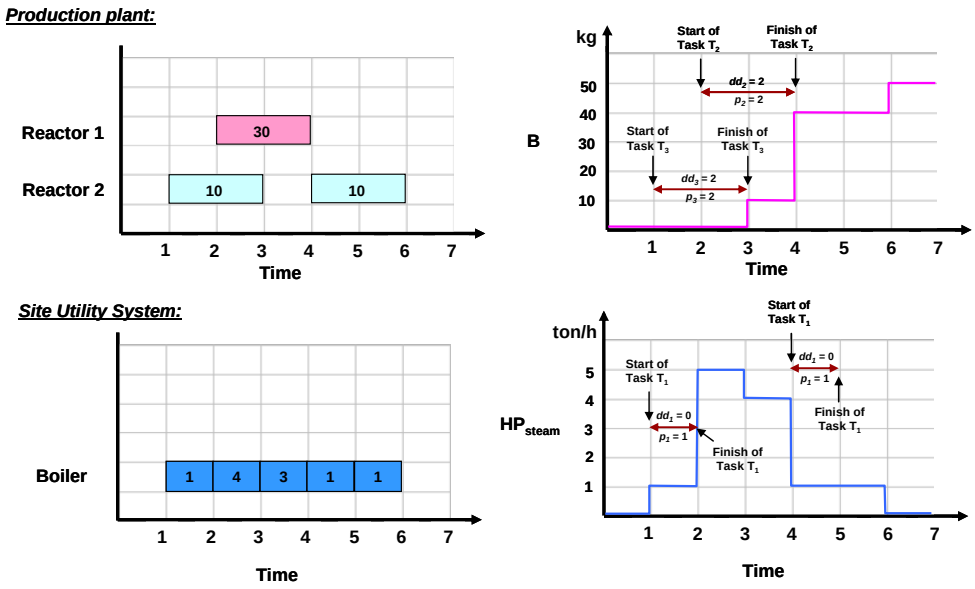

Figure IV.4: Notion of delivery time in ERTN framework

The 'delay time' for the processing tasks in production in the above example is 2 hr. For instance, the task T_3 in reactor 2 starts processing 10 kg of material A at start of time period 2 and produces 10 kg of material B at the end of time period 3 (delivery time = 2). Similarly, the task T_2 in reactor 1 starts processing 30 kg of material A start of time period 3 and produces 30 kg of material B at the end of time period 4 (delivery time = 2). In contrast, the boiler task T_1 converts water into HP steam by a continuous process. This conversion is instantaneous (delivery time = 0) and steam is supplied throughout the time period *t*. For example, the HP steam is continuously supplied at a flow rate of 3t/h throughout period *3* and there is no delay in converting input water into output HP steam.

IV.2.2 ERTN Resource Nodes

The diversity of resource that needs to be displayed in the ERTN framework makes the graphical distinction between cumulative and disjunctive resources all the more necessary. In the ERTN framework, the same circle and ellipse representation detailed in section III.2.5.1 is adopted.

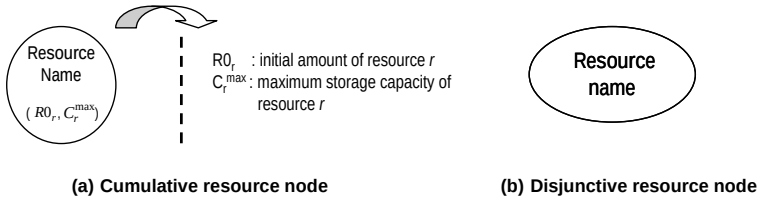

Figure IV.5: Representation of resource nodes in the ERTN framework

IV.2.2.1 Cumulative resource node

The cumulative resource node represents a resource that, at a given time can be shared by multiple processing tasks. The cumulative resource node can be used to represent both material and utility resources (figure IV.5a).

- The material resources are raw material, intermediate and finished products that is consumed or produced during the processing operation.
- Utility resource represents both water derivative resource and primary utility resource. The water derivative resources are all the utilities that can be derived from ambient water (for example, steam at different pressures, hot water, cold water etc.). The primary utility resources represent non derivable utilities (which can not be driven from water) like fossil fuel, electricity, etc.

IV.2.2.2 Disjunctive resource node

The disjunctive resource node represents a resource that, at a given time can be used by at most a single processing task. The disjunctive resources are normally processing equipment and manpower (figure IV.5b).

IV.2.3 ERTN Arcs: Material Flow Arcs, Disjunctive, Cumulative & Precedence Arcs

IV.2.3.1 Material Flow arcs

In addition to the concept of traditional "material fixed flow arc" (figure IV.6a) that already exists in the RTN framework (section III.2.5.1), the ERTN framework introduces the concept of "material free flow arc". This arc shown in the figure IV.6b, enables to represent the operation of certain tasks that do not produce material resources in fixed and known proportions of batchsize in site utility system (e.g. multi-stage turbines).

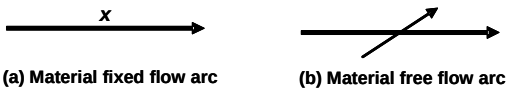

Figure IV.6: Representation of the material fixed and free flow arcs in the ERTN framework

Interaction with the external environment:

Other than normal interaction between different resources in production process and the site utility system, the ERTN framework also needs to handle interaction with the external environment. The external

environment constitutes the *Market* to which final products are sold and from which raw materials and utilities can are purchased. To incorporate this interaction two special arcs are required:

- Source arc: corresponding to the purchases of resource from external environment.
- Sink arc: corresponding to the supply of resources to external environment.

The material fixed flow arc is used to represent these special cases, showing interaction between resource nodes and the external environment.

IV.2.3.2 Disjunctive resource arc

The original RTN framework used the same kind of arc to show interaction between the processing tasks and the resources. However, over the years, for the sake of graphical clarity the RTN framework started using a separate kind of arc to represent the interaction between the processing tasks and unary resources like processing equipment and manpower.

The ERTN framework adopts the same principle by explicitly defining "Disjunctive resource arc" that shows the association of disjunctive resource with the processing task(s). The disjunctive resource arc graphically demonstrates the type and the number of different processing tasks performed by a resource (figure IV.7).

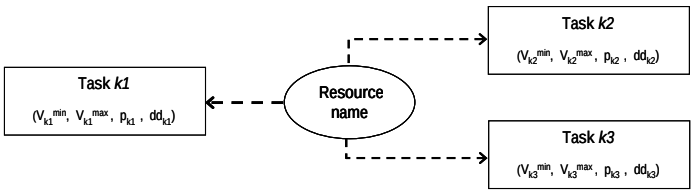

Figure IV.7: Representation of the disjunctive resource arc in the ERTN framework

IV.2.3.3 Utility arc

The duality of water derivative resources that has been highlighted in the section IV.1.1 leads to the necessity of defining a new kind of arc called "utility arc". This arc enables to represent:

- The consumption of a utility resource *r* during a processing task *k* (figure IV.8a). In this case, the parameter $uf_{k,r}^{cons}$ and $uv_{k,r}^{cons}$ located above the arc permits to define the amount of utility *r* required to perform the task *k*. The parameter $uf_{k,r}^{cons}$ represents the fixed quantity of resource *r* consumed whereas $uv_{k,r}^{cons}$ represents variable proportion of resource *r* consumed with respect to the batchsize performed by the task *k*.
- The production of a utility resource *r* by a processing task *k* (figure IV.8b). In this case, the parameter $uf_{k,r}^{prod}$ and $uv_{k,r}^{prod}$ located above the arc would permit to define the amount of utility *r* produced by task *k*.

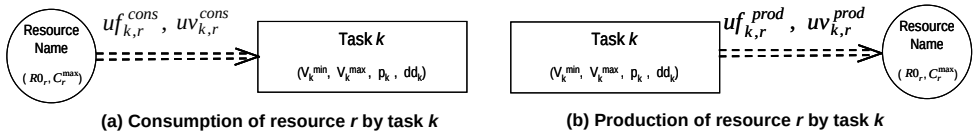

Figure IV.8: Representation of the utility arc in the ERTN framework

As we shall see later, the equations related to resources (which are capacity constraints) are expressed in the same manner for material resources and utility resource. It has already been established in the previous section that a resource could simultaneously play the role of material resource for the site utility system and

material resource in production plant. For this reason it was decided not to make a graphical or mathematical modeling distinction between two types of resources.

Importance of arcs in ERTN framework:

Actually, the ERTN framework makes ***use of different arcs*** to clarify when a resource acts as material resource and when it acts as utility resource. This nuance can be explained by reconsidering the example that was developed in section IV.1.1.

Example

Since the basics of the ERTN framework have been introduced, it is now possible to represent ERTN diagram of the example under consideration.

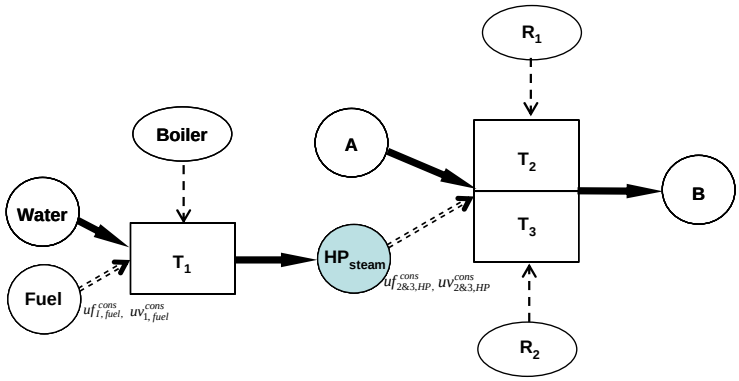

Figure IV.9: ERTN representation of the example developed in section IV.1.1.

In this example, the resources A, B and Water are material resources and are represented using material flow arcs. In the same vein the resource fuel is a utility resource and is represented by utility resource arc. In contrast, the resource HP_{steam} acts as material resource for the boiler task and utility task for reactors R1 & R2. For this reason, the HP_{steam} is connected to the ***boiler task by using a flow arc*** *and to the* ***utility task using the utility arc****.*

IV.2.3.4 Restart precedence arc

The processing equipment can either be in active state (executing a task) or in idle state. In the former frameworks, it is assumed that switching from the idle to active state is instantaneous. However, in some processing equipment, this switching procedure requires considerable time delay and also results in incurring additional costs. A perfect example of such processing equipment is the boiler. Boiler operations are not instantaneous and once shutdown, they require a set-up step to switch from idle state to active state. During this step, boiler need to be fed with fuel but does not produce steam. To enable the representation of these peculiar set up phase, the ERTN representation introduces a new type of arc called "restart precedence arc" (see figure IV.10).



Figure IV.10: Representation of the restart precedence arc in the ERTN framework

The direction of the arrow head on the arc sets the task precedence. For example, in the case of figure IV.10 task *k2* must be preceded by restart task *k1*.

Table IV. 1: Semantics of ERTN framework

NAME	SYMBOL	VARIABLES	REPRESENTS
Task node	Task *k* (V_k^{min}, V_k^{max}, p_k, dd_k)	V_k^{min} : minimum batchsize V_k^{max} : maximum batchsize p_k : processing time dd_k : delivery time	Processing operation
Cumulative resource node	Resource Name ($R0_r$, C_r^{max})	$R0_r$: initial amount of resource *r* C_r^{max} : maximum storage capacity of resource *r*	Shared resources which can be material resource or utility resources.
Disjunctive resource node	Resource name		Singular resources which can not be shared among tasks. Normally processing equipment and manpower.
Material Fixed flow arc	Resource Name ($R0_r$, C_r^{max}) → Task *k* (V_k^{min}, V_k^{max}, p_k, dd_k); Task *k* → Resource Name	$\rho_{k,r}^{cons}$: proportion of materail resource *r* consumed by processing task $\rho_{k,r}^{prod}$: proportion of materail resource r produced by processing task	Resource entering or leaving a task node in priori known fixed proportion of batchsize.
Material Free flow arc	→		Resource entering or leaving a task node in unknown proportion of batchsize. The proportion is determined by optimization solver.
Utility resource arc	Resource Name ($uf_{k,r}^{cons}$, $uv_{k,r}^{cons}$) ⇢ Task *k* (V_k^{min}, V_k^{max}, p_k, dd_k); Task *k* ⇢ Resource Name ($uf_{k,r}^{prod}$, $uv_{k,r}^{prod}$)	$uf_{k,r}^{cons}$: fixed consumption of utility resource *r* $uv_{k,r}^{cons}$: variable consumption of utility resource *r* $uf_{k,r}^{prod}$: fixed production of utility resource *r* $uv_{k,r}^{prod}$: variable production of utility resource *r*	The production and/or consumption of resource during execution of a processing operation.
Disjunctive resource arc	- - - - - →		The link between the processing operation and the disjunctive resources.
Restart precedence arc	⇒		Need to launch a restart task in case the processing equipment has been in idle state at the preceding time interval.

IV.3 RULES FOR CONSTRUCTING ERTN REPRESENTATION

The ERTN framework enables co-joint representation of the production plant and the site utility system. For the production plant the ERTN primarily uses the rule 1-8 developed in the RTN representation (section III.2.5.1). On the other hand, for the site utility system some additional rules are proposed that enable to address the particular nature of utilities production and consumption. These rules are as follows:

Rule 9:

For all discontinuous tasks, the delivery time is equal to the task duration.
For all continuous tasks, the delivery time is equal to 0.

The notion of 'delivery time' allows taking into account the distinct physical characteristics of the tasks in production plant from those in site utility system. Most tasks in production plant are discontinuous and need a certain processing time to convert input material stream into output stream (delivery time = task duration). On the contrary, the tasks in utility system are continuous and instantaneously convert input stream into output stream (delivery time = 0; task duration ≠ 0).

Rule 10:

The material flow arcs entering or leaving a continuous processing task is characterized by flow rates.
The material flow arcs entering or leaving a discontinuous processing task is characterized by amount of material.

Rule 11:

The task producing and consuming material resources in known proportions of batchsize is connected with the associate resources using a material fixed flow arc.

The purpose of processing tasks in utility system is to carry out the phase transformation process, i.e., changing one water phase to another water phase. For example, figure IV.11 displays two processing tasks. During the processing task T_1 (boiling), water is converted into HP steam and during the task T_2 (expansion) the HP steam is converted into MP steam. To demonstrate these types of transformation processes, material fixed flow arcs are used to connect the feed and output material resources.

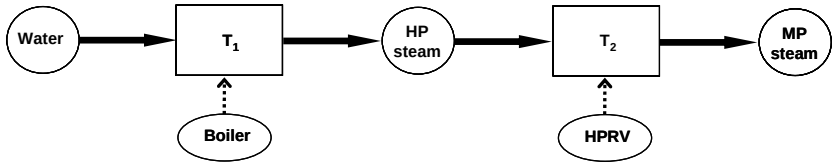

Figure IV.11: Water derivative resources as material resources

Rule 12:

The task producing material resources in unknown proportions of batchsize is connected with the associate resources with a material free flow arc.

As explained in earlier in section III.3, certain tasks in utility system do not produce material resources in proportions of batchsize fixed a priori. On the contrary, this proportion is variable that needs to be calculated through the resolution of the scheduling problem. In the ERTN representation, the tasks producing material resources in variable proportion of batchsize is represented using material free flow arc. Figure IV.12 displays HP_{steam} material resource that receives 'x+y' kg of HP steam from the boiling task executed in the boiler.

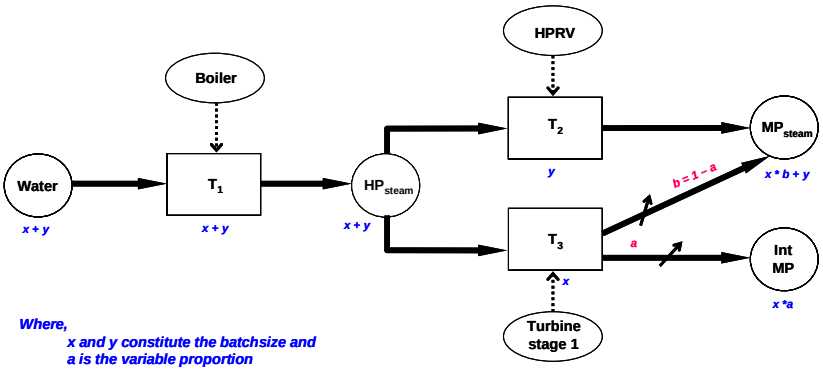

Figure IV.12: Use of material free flow arc to represent production of material resources in unknown proportions of batchsize

Out of this 'y' kg is expanded through the HPRV and rest 'x' kg expanded through a multistage turbine. Consequently, the MP_{steam} material resource receives MP steam partly from the HPRV and partly through extraction from the first stage of the turbine. The proportion of MP steam received from throttling task in HPRV is known and assumed to be *1*. It means that all the HP steam entering the HPRV is converted into the MP steam. However, the amount of MP stream extracted from the turbine is not fixed. It is a variable whose amount (*1 – a*) is determined by the MP steam demands of the production process. This variable nature of steam extraction from expansion task T_3 in the turbine is characterized by using material free flow arcs.

Rule 13:

The consumption or production of a cumulative resource other than material resource by a processing task is represented by a utility arc.

In the utility system, a processing task involved in phase transformation process may need to consume a primary utility resource. For example, figure IV.13a demonstrates two phase transformation tasks. The expansion task T_2 does not require any for a primary utility. On the contrary, the boiling task T_1 needs to be fed with the fossil fuel. This primary utility consumption is illustrated by the use of a utility arc. Similarly, in the utility system, a processing task involved in phase transformation process may produce a primary utility resource. Figure IV.13b displays the production of electricity (primary utility resource) as a consequence of expanding HP steam in the turbine (task T_3). The primary utility produced by task in utility system can be consumed by another task being performed in production plant. Figure IV.13c shows the production of

electricity by turbine task T_3 which is coincidently consumed by the material transformation task T_4 carried out in $Machine_1$ of production plant.

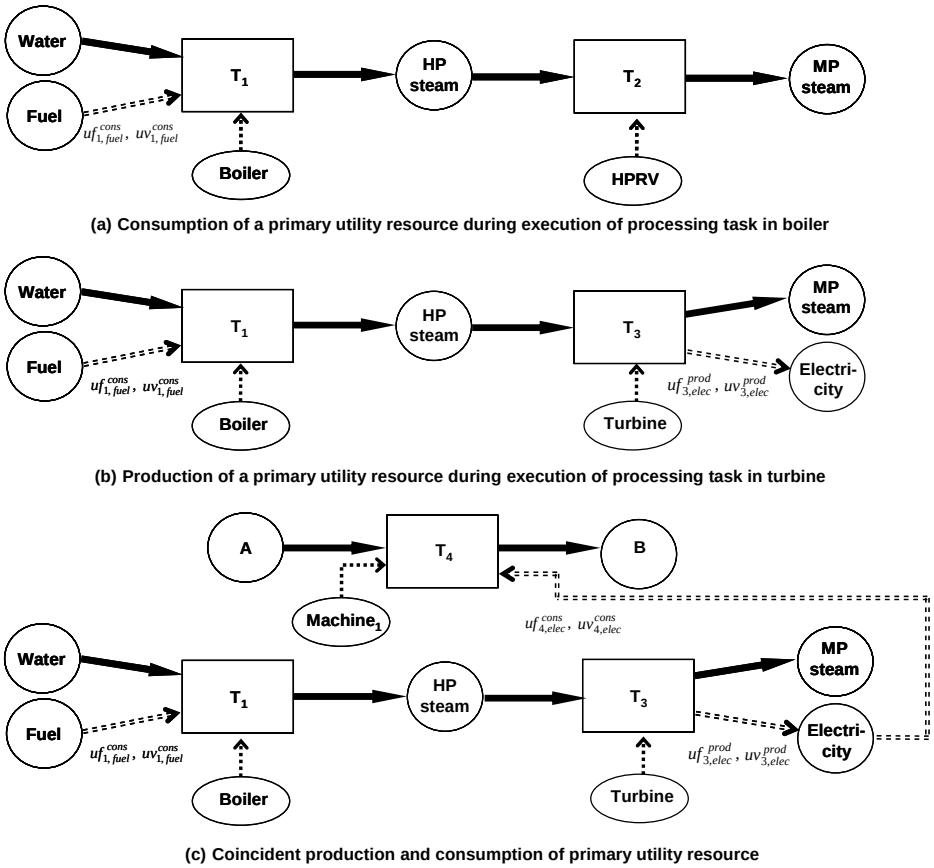

Figure IV.13: Use of utility arc

As explained earlier the water derivative resource can simultaneously act as material resource for processing task in utility system and cumulative utility resource for processing task in production plant. Figure IV.14 displays one such water derivative resource in shape of HP steam resource. The HP steam resource acts as a output material resource produced by task T_1 and input material resource consumed by the task T_2. These flows are represented by material fixed flow arc.

Simultaneously, the HP steam resource also acts as utility resource for task T_4 carried out in $Machine_1$ of production plant. In this case, the utility flow is represented by a utility arc.

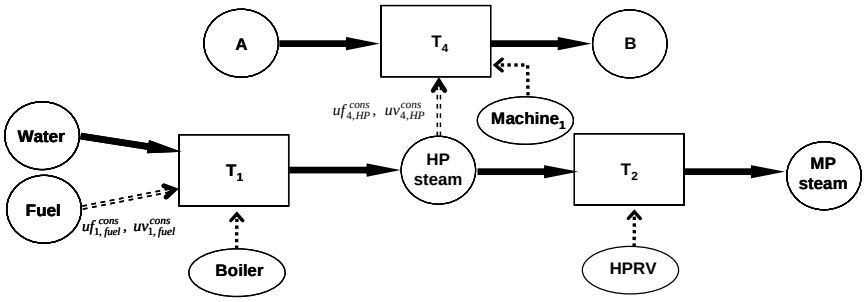

Figure IV.14: Water derivative resources simultaneously acting as material resource and cumulative resource

Rule 14:

In case processing equipment in idle condition necessitates going through a restarting phase, it is represented by a restart precedence arc.

During the production process, the processing equipments can be either active or idle. Most of the processing equipments can move from idle to active state immediately (figure IV.15a) but certain need to go through a restarting phase. Moreover, during this restarting period the processing equipments may consume primary utility resource or water derivative resource or both resources. The ERTN framework models this restart phase as a separate task which must be launched before normal processing operation can begin (figure IV.15b).

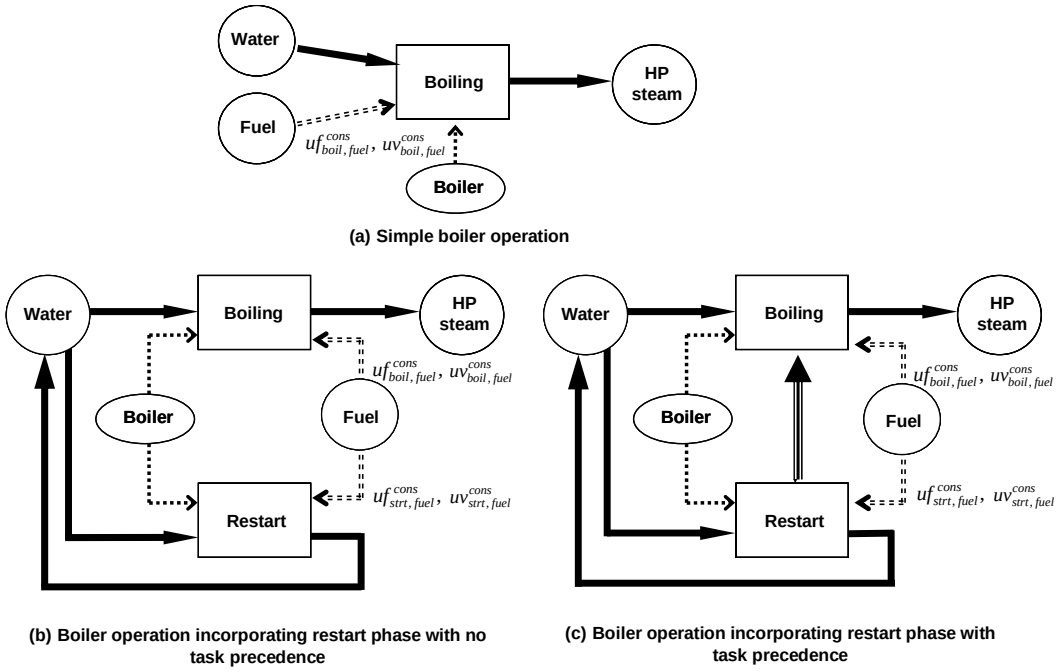

Figure IV.15: Importance of restart precedence task

However, incorporating this unique precedence is not very simple since the restart task is only launched when processing equipment had previously been in idle state. In case the processing equipment had already been in active state then the restarting task is redundant and does not need to be performed. This unique precedence is displayed by using the restart precedence arc (figure IV.15c). The arrow head of the arc demonstrates that the boiler restart task must be launched once before boiling task can be executed.

IV.4 MATHEMATICAL MODEL OF ERTN FRAMEWORK

In the ERTN framework, there is a direct relationship between the graphical representation and the mathematical formulation. Each entity set in the graphical representation corresponds to a collection of mathematical constraints. This section inventories the entities set which lead to specific constraints.

IV.4.1 Allocation Constraints: Disjunctive Resource Arc

Each disjunctive resource arc linking processing task to the processing equipment leads to the formulation of an allocation constraint (figure IV.16).

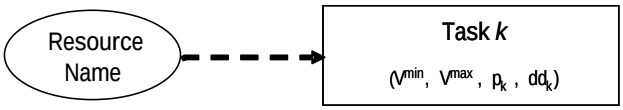

Figure IV.16: Allocation constraints linked to mathematical formulation using disjunctive arcs

Since the resources in the ERTN framework are not treated in a uniform way, the allocation constraints need to be imposed explicitly. Equation [Eq. IV-1] is similar to the allocation constraint (Equation [Eq. III-3]) developed in the STN framework, which takes into account full backward aggregation. At a given time period*t*, a processing equipment *j* can at most initiate one task operation *k*. Hence, it won't be available to execute another task for the duration of the task (i.e., during periods $t'= t - p_k+1$ till $t'= t + p_k -1$).

$$\sum_{\substack{k\in K_j \\ t>0}} \sum_{t'=t-p_k+1}^{t} W_{k,t'} \le 1 \qquad \forall j \in J, \forall t \in 1,..,T \qquad \text{[Eq. IV-1]}$$

Definition

$W_{k,t} = 1$ if a task *k* is launched at start of time period *t*,
$W_{k,t} = 0$, otherwise.
p_k: duration of the task *k*.

The backward aggregation used in the above equation can be better explained with the help of the illustrative example developed in chapter III:

Example

- ***Processing equipment performing mono-tasks***

There are two types of mono-tasking processing equipments: (i) whose task duration is equal to one time periodand (ii) whose task duration is spread over several task durations. They are represented by figure IV.16 with only single disjunctive resource arc used to connect the disjunctive resource with the processing task.

The impact of the backward aggregation on the mono-task processing equipment is represented by the figure IV.17, by using the example of a heater (task duration equal to one time interval) and separator (task duration equal to two time intervals).

- Heater:

$$\Rightarrow \begin{cases} W_{1,t} \le 1 & at \quad t \\ W_{1,t-1} \le 1 & at \quad t\text{-}1 \\ W_{1,t+1} \le 1 & at \quad t\text{+}1 \end{cases}$$

If $W_{1,t}$=1, then $W_{1,t-1} \le 1$ and $W_{1,t+1} \le 1$

Thus, in case of mono-task processing equipment whose task duration is equal to one time interval, the task can be executed at start of each time interval.

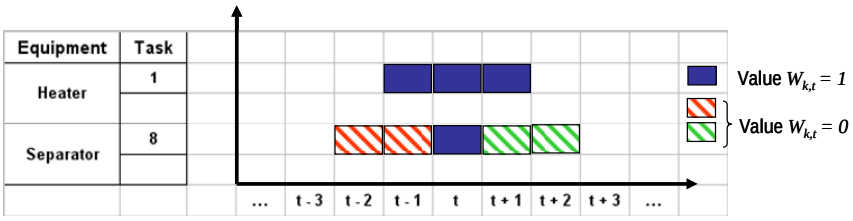

Figure IV.17: Allocation constraints for mono-task processing equipment

- Separator:

$$\Rightarrow \begin{cases} W_{8,t-2} + W_{8,t-1} + W_{8,t} \le 1 & at \quad t \\ W_{8,t-1} + W_{8,t} + W_{8,t+1} \le 1 & at \quad t\text{+}1 \\ W_{8,t} + W_{8,t+1} + W_{8,t+2} \le 1 & at \quad t\text{+}2 \end{cases}$$

If $W_{8,t}$=1, then $W_{8,t-2}$=$W_{8,t-1}$=$W_{1,t+1}$=$W_{1,t+2}$= 0

In case of mono-task processing equipment with task duration spread over several time intervals, if task operation k is launched at time period t then another task can not be performed during interval t'= t – p_k+1 till t'= t + p_k –1.

- ***Processing equipment performing multi-tasks***

The allocation constraints in multi-tasking processing equipments are represented by figure IV.18 with multiple disjunctive resource arc used to connect the disjunctive resources with the various processing tasks performed by the equipment.

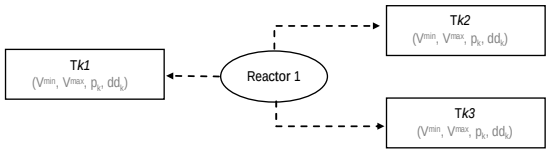

Figure IV.18: A multi-tasking disjunctive resource

Example

The impact of the backward aggregation on the multi-tasking processing equipment is represented by the figure IV.19, by recalling from illustrative example from chapter III the instance of a Reactor 1 that can perform the task T_2, T_3 and T_6.

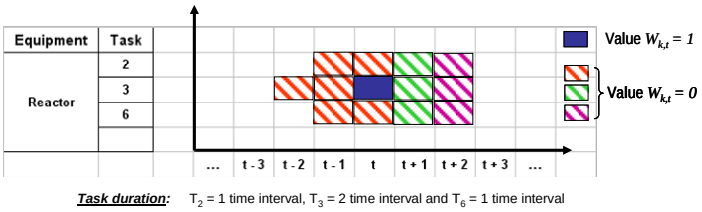

Figure IV.19: Allocation constraints for multi-task processing equipment

- Reactor 1

$$\Rightarrow \begin{cases} W_{2,t-1} + W_{2,t} + W_{3,t-2} + W_{3,t-1} + W_{6,t-1} + W_{6,t} + W_{3,t} \le 1 & at\ \ t \\ W_{2,t} + W_{2,t+1} + W_{3,t-1} + W_{3,t} + W_{3,t+1} + W_{6,t} + W_{6,t+1} \le 1 & at\ \ t+1 \\ W_{2,t+1} + W_{2,t+2} + W_{3,t} + W_{3,t+1} + W_{3,t+2} + W_{6,t+1} + W_{6,t+2} \le 1 & at\ \ t+2 \end{cases}$$

If $W_{3,t}=1$, *then* $W_{2,t-1}=W_{2,t}=W_{3,t-2}=W_{3,t-1}=W_{6,t-1}=W_{6,t}=0$
and $W_{2,t+1}=W_{3,t+1}=W_{6,t+1}=W_{2,t+2}=W_{3,t+2}=W_{6,t+2}=0$

Thus, it can be concluded from the above discussion that the backward aggregation used in equation [Eq. IV-1] can effectively handle allocation constraints for both the mono-tasking equipment and the multi-tasking equipment.

IV.4.2 Capacity Constraint

IV.4.2.1 Storage through cumulative resource node

The general representation of a cumulative resource node has already been given in figure IV.5a. The cumulative resource node displays the initial amount of resource available and the maximum storage capacity of the resource. This capacity limitation is represented by Equation [Eq. IV-2] which states that the amount of resource stored in a resource *r* should never exceed its maximum storage capacity.

$$0 \le R_{r,t} \le C_r^{\max} \qquad \forall r \in R, \forall t \in 1,..,T \qquad \text{[Eq. IV-2]}$$

Definition

$R_{k,t}$: the amount of resource *r* available during time interval *t*

$C_r^{\max}$: maximum storage capacity of resource *r*

IV.4.2.2 Processing equipment through task node

The general representation of a task node is given in figure IV.3. Equation [Eq. IV-3] represents the production capacity constraints of the processing equipment which limits the amount of batchsize $B_{k,t}$ that can be undertaken by a processing task k at time interval t. The batchsize is bounded by the maximum and minimum capacities of the processing equipment.

$$W_{k,t}V_k^{\min} \le B_{k,t} \le W_{k,t}V_k^{\max} \qquad \forall k \in K, \forall t \in 1,..,T \qquad \text{[Eq. IV-3]}$$

Definition

$B_{k,t}$: amount of material (batchsize) being processed by task k during time period t

$V_k^{\min}$: minimum capacity of processing task k

$V_k^{\max}$: maximum capacity of processing task k

IV.4.3 Cumulative Resource Mass Balance

Cumulative resource node in utility system can acts simultaneously as utility resource and material resource, which is an important consideration when applying mass balance around resource node. A resource node in utility system not only provides the material resources for the phase transformation process (acting as material resource) but also fulfills the utility demands of the processing task (acting as utility resource). This resource can receive utilities from external sources as well (figure IV.20).

The mass balance around resource node is captured in the graphical representation by the use of different arcs coming into and out of the resource node.

- The material fixed and free flow arcs represent material flow to and from resource node (terms $O_{s,k,t}$ *and* $I_{s,k,t}$).
- The utility arcs represent the utility exchanges between cumulative utility resources and the processing tasks (terms $UO_{s,k,t}$ and $UI_{s,k,t}$).
- The sink and source arcs represent the resource purchased and sold to the external environment ($Out_{s,t}$ and $In_{s,t}$).

Equation [Eq. IV-4] represents the generalized mass balance that is universally applicable for all the cumulative resources.

$$R_{r,t} = R_{r,t-1} + \sum_{k \in K} O_{r,k,t-dd_{r,k}} - \sum_{k \in K} I_{r,k,t} + \sum_{k \in K} UO_{r,k,t-dd_{r,k}} - \sum_{k \in K} UI_{r,k,t} + In_{r,t} - Out_{r,t} \qquad \forall r \in R, \forall t \in 1,..,T$$

[Eq. IV-4]

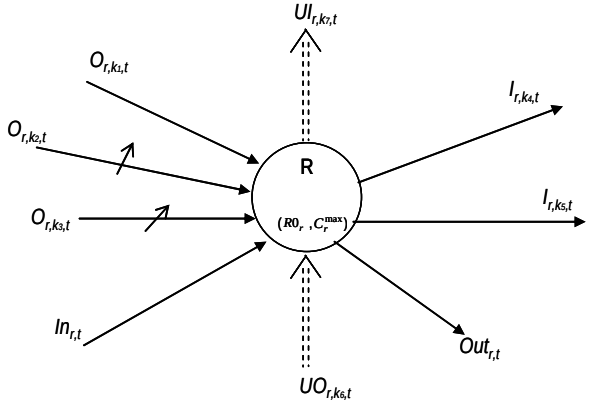

Figure IV.20: Mass balances around a resource node

Definition

$I_{r,k,t}$: quantity of material or material flow into task k from resource r at start of period t
$O_{r,k,t}$: quantity of material or material flow from task k into resource r at start of period t
$UI_{r,k,t}$: utility flow going into task k from resource r at during time period t
$UO_{r,k,t}$: utility flow going from task k into resource r at during time period t
$In_{r,t}$: import into the resource r from an external source at interval t
$Out_{r,t}$: export from the resource r from an external source at interval t

The resource mass balances are completed by following additional constraints:

- The initial stocks R0r are supposed to be known.

$$R_{r,0} = R0_r \qquad \forall r \in R \qquad \text{[Eq. IV-5]}$$

- Bounds on the imports and exports of resource are given by equations [Eq. IV-6] and [Eq. IV-7]

$$Out_{r,t}^{\min} \le Out_{r,t} \le Out_{r,t}^{\max} \qquad \forall r \in R \qquad \text{[Eq. IV-6]}$$

$$In_{r,t}^{\min} \le In_{r,t} \le In_{r,t}^{\max} \qquad \forall r \in R \qquad \text{[Eq. IV-7]}$$

- Demand satisfaction constraint.
  The demands of each finished product resource at time period t during the time Horizon is supposed to be known. These demands are met by using equations [Eq. IV-8].

$$Out_{r,t}^{\min} = Out_{r,t}^{\max} = D_{r,t} \qquad \forall r \in R \qquad \text{[Eq. IV-8]}$$

Definition

$In_r^{\max}$: maximum import into the resource r from an external source at interval t
$Out_r^{\max}$: maximum export from the resource r from an external source at interval t
$D_{r,t}$: demand of resource r (finished product) at time t

IV.4.4 Task Mass Balances

In the ERTN framework, some task can produce or consume resources in a priori unknown proportions of batchsize. These proportions are calculated through the resolution of the optimization problem. Consequently, contrary to the RTN framework these proportions need to be constrained by means of mass balance equations written for each task node.

The mass balance around the task node is displayed in the graphical representation by using the fixed and free flow arcs entering and leaving the task node (figure IV.21).

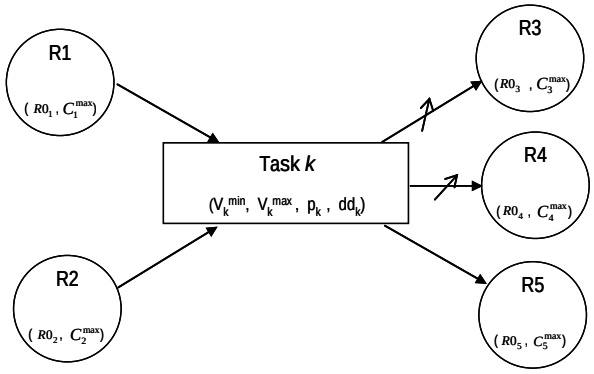

Figure IV.21: Mass balances around task node

Equations [Eq.IV-9] and [Eq.IV-10] simply indicates that the batchsize of a task k at time interval t is equal to the amount of material $I_{s,k,t}$ entering from the input material resources as well as the amount of material $O_{s,k,t}$ leaving towards the output material resources.

$$B_{k,t} = \sum_{r \in R_k^{cons}} I_{r,k,t} \qquad \forall k \in K, \forall t \in 1,..,T \qquad \text{[Eq. IV-9]}$$

$$B_{k,t} = \sum_{r \in R_k^{prod}} O_{r,k,t} \qquad \forall k \in K, \forall t \in 1,..,T \qquad \text{[Eq. IV-10]}$$

Furthermore, the amount of input and output flows into and out of a task k needs to be constrained. However, this constraint depends on the kind of arc representing these flows (free flow arcs or material fixed flow arcs). Equations [Eq.IV-11] till [Eq.IV-14] permit to take into consideration both cases.

Starting with the outputs from the task, which are constrained by equations [Eq.IV-11] and [Eq.IV-12].

$$O_{r,k,t} \le \left(\rho_{k,r}^{prod} + \mu_{k,r}^{prod}\right) B_{k,t} \qquad \forall k \in K, \forall r \in R_k^{prod}, \forall t \in 1,..,T \qquad \text{[Eq. IV-11]}$$

$$O_{r,k,t} \ge \rho_{k,r}^{prod} B_{k,t} \qquad \forall k \in K, \forall r \in R_k^{prod}, \forall t \in 1,..,T \qquad \text{[Eq. IV-12]}$$

Definition

$\rho_{k,r}^{prod}$: proportion of resource r produced by task k with respect to batchsize processed.

$\mu_{k,s}^{prod}$: proportion parameter for resource r produced by material free flow arc.

In the case of material fixed flow arcs the proportions are $0 \le \rho_{k,r}^{prod} \le 1$ and $\mu_{k,r}^{prod} = 0$. Therefore the equations [Eq. IV-11] and [Eq. IV-12] become respectively

$$O_{r,k,t} \le \rho_{k,r}^{prod} B_{k,t} \qquad \forall k \in K, \forall r \in R_k^{prod}, \forall t \in 1,..,T \qquad \text{[Eq. IV-11a]}$$

$$O_{r,k,t} \ge \rho_{k,r}^{prod} B_{k,t} \qquad \forall k \in K, \forall s \in R_k^{prod}, \forall t \in 1,..,T \qquad \text{[Eq. IV-12a]}$$

We finally obtain the same constraint as used in the RTN framework.

$$O_{r,k,t} = \rho_{k,r}^{prod} B_{k,t} \qquad \forall k \in K, \forall r \in R_k^{prod}, \forall t \in 1,..,T$$

In contrast, in the case of material free flow arcs the proportions are $\rho_{k,s}^{prod} = 0$ and $\mu_{k,s}^{prod} = 1$. Therefore, the equations [Eq. IV-11] and [Eq. IV-12] become respectively.

$$O_{r,k,t} \le B_{k,t} \qquad \forall k \in K, \forall r \in R_k^{prod}, \forall t \in 1,..,T \qquad \text{[Eq. IV-11b]}$$

$$O_{r,k,t} \ge 0 \qquad \forall k \in K, \forall r \in R_k^{prod}, \forall t \in 1,..,T \qquad \text{[Eq. IV-12b]}$$

Consequently the optimization solver allows the output from a task to assume any value between zero and batchsize undertaken.

$$0 \le O_{r,k,t} \le B_{k,t} \qquad \forall k \in K, \forall r \in R_k^{prod}, \forall t \in 1,..,T$$

In the same vein the following equations take into account the material leaving the task k.

$$I_{r,k,t} \le \left(\rho_{k,r}^{cons} + \mu_{k,r}^{cons}\right) B_{k,t} \qquad \forall k \in K, \forall r \in R_k^{cons}, \forall t \in 1,..,T \qquad \text{[Eq. IV-13]}$$

$$I_{r,k,t} \ge \rho_{k,r}^{cons} B_{k,t} \qquad \forall k \in K, \forall r \in R_k^{cons}, \forall t \in 1,..,T \qquad \text{[Eq. IV-14]}$$

Definition

$\rho_{k,r}^{cons}$: proportion of resource r consumed by task k with respect to batchsize processed.

$\mu_{k,r}^{cons}$: proportion parameter for resource r consumed by free flow arc

IV.4.5 Consumption/Production of Utility Resource

IV.4.5.1 Consumption of utility resource

The consumption of the utility resource is displayed in the graphical representation by a utility arc entering the task node (figure IV.22).

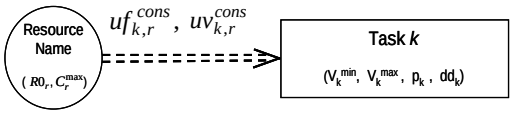

Figure IV.22: Utility resource consumed by processing task

The amount of utility resource consumed by different processing tasks is quantified by equation [Eq. IV-15]. The amount of resource $UI_{s,k,t}$ consumed by a task k from a resource r comprises of a constant term $ufi_{k,r}$ and a variable term $uvi_{k,r}$ (is dependent on the batchsize).

$$UI_{r,k,t} = uf_{k,r}^{cons}{}_{k,r} W_{k,t} + uv_{k,r}^{cons} \sum_{t'=t-p_k+1}^{t} B_{k,t'} \quad \forall r \in R, \forall k \in K, \forall t \in 1..T \qquad \text{[Eq. IV-15]}$$

IV.4.5.2 Production of utility resource

The consumption of utility resource is displayed in the graphical representation by a utility arc leaving the task node (figure IV.23).

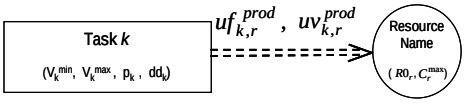

Figure IV.23: Utility resource produced by processing task

As a consequence of the executing processing task, certain primary utilities are also generated. The amount of utility resource (water driven utility resource and primary utility resource) $UO_{s,k,t}$ produced by a task k from a resource s comprises of a constant $ufo_{k,s}$ and a variable term $uvo_{k,s}$ (dependent on the batchsize).

$$UO_{r,k,t} = uf_{k,r} W_{k,t} + uvo_{k,r} \sum_{t'=t-p_k+1}^{t} B_{k,t'} \quad \forall r \in R, \forall k \in K, \forall t \in 1..T \qquad \text{[Eq. IV-16]}$$

Definition

$uf_{k,r}^{cons}$: fixed quantity of resource r consumed by task k

$uv_{k,r}^{cons}$: variable proportion of resource r consumed by task k with respect to the batchsize

$uf_{k,r}^{prod}$: fixed quantity of resource r produced by task k

$uv_{k,r}^{prod}$: variable proportion of resource r produced by task k with respect to the batchsize

Important role of arcs in material balances:

As mentioned earlier, in ERTN framework arcs control when a resource acts as material resource and when it acts as utility resource. The necessity for separating the two types of arcs can be explained through use of the simple example in figure V.24. The material fixed arcs account for the material entering and leaving from the task T4. According to the ***rule 4*** developed in Chapter III, the role of the task is simply carry out the processing operation and task can not act as storage station. Hence at the task node, material is conserved

(i.e. $mass_{in}$ =$mass_{out}$). Moreover, in order to perform the processing operation the task requires to be supplied with certain amount of utility (HP_{steam} in this case).

However, if the same material flow arc is used to represent the input utility into the task node then mass balance constraint is not satisfied (figure IV.24a). Thus, it is imperative to use a different type of arc to represent inflow or outflow of a utility from a task node. The utility arc plays no role in the material balance for the tasks but is a part of material balance for cumulative resource node.

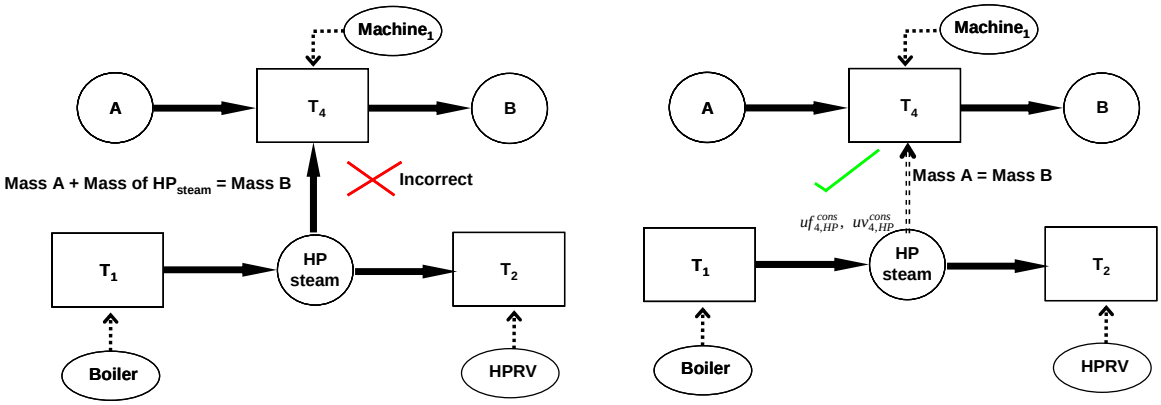

Figure IV.24: Necessity for using two separate arcs: material resource arc and utility arc

IV.4.6 Modeling of Multimode Equipment

The processing equipment can either be in active state (executing a task) or in idle state. In the former frameworks it is assumed that switching from the idle to active state is instantaneous. However, in some processing equipment this switching procedure requires considerable time delay and also results in incurring additional costs. A perfect example of such processing equipment is the boiler. Boiler operations are not instantaneous and once shutdown, it requires a specified amount of time before it can at first go through restart procedure and then ultimately move towards normal operation regime. Thus, for such type of processing equipments, the mathematical formulation has to integrate three distinct steps – shutdown, restart and normal operations.

In the ERTN framework the operations of such type of processing equipments are divided into two task – a restart task and normal operation task. To show this task precedence at the graphical level a simple task precedence arc is used (figure IV.25).

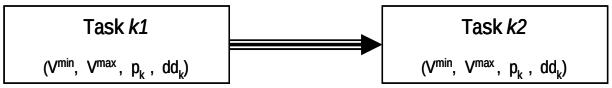

Figure IV.25: Restart precedence task

It is assumed that once in active state the processing equipments needs equivalent of one time interval to shutdown and also, one time period to restart. Thus once shut down (in idle state) the processing equipments needs equivalent of two time period to resume normal operations.

The future operational state of processing equipment depends on two factors: (i) the current state of the processing equipment and (ii) previous state of boiler as well. Equation IV-16 expresses this restraint in mathematical form by constraining the value held by allocation binary variables $W_{k,t}$. All the possible numeric values for the allocation binary variable in three successive periods according to equation [Eq. IV-17] are given in table *IV.2*.

$$W_{k,t+1} \le W_{k,t} + \left(1 - W_{k,t-1}\right) \qquad \forall j \in J^{rstrt}, \forall k \in K_j^{op}, \forall t \in 2,..,T-1 \qquad \text{[Eq. IV-17]}$$

Definition

J^{rstrt} : collection of processing equipment which needs to go through restart task

K_j : collection of tasks carried out in the processing equipment j ($K_j = K_j^{op} \cup K_j^{rstrt}$)

K_j^{rstrt} : collection of restart tasks carried out in the processing equipment j

K_j^{op} : collection of tasks carried out in the processing equipment j other than restart tasks

Table IV.2: Possible values for allocation binary variable

$W_{k,t-1}$	$W_{k,t}$	$W_{k,t+1}$
0	0	≤ 1
0	1	≤ 1
1	0	0
1	1	≤ 1

Equations [Eq. IV-18] and [Eq. IV-19] establish that restart of processing equipment (an allocation variable $W_{k',t}$) at a given time period will occur only if the processing equipment is going to be active in future period and it was idle in current time period.

$$W_{k',t} \ge W_{k,t+1} - W_{k,t} \qquad \forall j \in J^{rstrt}, \forall k \in K_j^{op}, \forall k' \in K_j^{rstrt}, \forall t \in 2,..,T-1 \qquad \text{[Eq. IV-18]}$$

$$W_{k',t} \le W_{k,t+1} \qquad \forall j \in J^{rstrt}, \forall k \in K_j^{op}, \forall k' \in K_j^{rstrt}, \forall t \in 2,..,T-1 \qquad \text{[Eq. IV-19]}$$

The possible numeric values for the allocation binary variables $W_{k',t}$ and $W_{k,,t}$ over two successive time intervals are given in table *IV.3*.

Table IV.3: Possible numeric values of $W_{k',t}$ and $W_{k,,t}$

$W_{k,t}$	$W_{k,t+1}$	$W_{k',t}$
0	0	0
0	1	1
1	0	0
1	1	≤ 1 → 0 by criteria

Moreover, during the restart phase the processing equipment consumes utility. This consumption is accounted by the fixed term ($uf_{k,s} \cdot W_{k,t}$) in the equation IV-14.

IV.4.7 Synthesis: Recapitulative Table of Equations and ERTN Input Data

The main advantage of the ERTN framework is its generic nature, which allows developing direct correspondence between the semantic elements of the graphical representation and the mathematical constraints. Hence, a complete scheduling model can be developed on the basis of the ERTN representation of the industrial unit and the associated mathematical equations that have been summed up in table IV.4.

Moreover, all the necessary data required for developing an ERTN representation is given in table IV.5.

Table IV.4: Recapitulative table of semantic elements and corresponding equations of ERTN framework

NAME	SYMBOL	EQUATION	
Cumulative resource capacity constriant	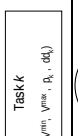	$0 \le R_{r,t} \le C_r^{\max}$ $\forall r \in R, \forall t \in T$	[Eq. IV-1]
Processing task capacity constriant		$W_{k,t} V_k^{\min} \le B_{k,t} \le W_{k,t} V_k^{\max}$ $\forall k \in K, \forall t \in T$	[Eq. IV-2]
Allocation constraint	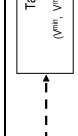	$\sum_{k \in K} \sum_{t'=t-p_k+1}^{t} W_{k,t'} \le 1$ $\forall j \in J, \forall t \in T$	[Eq. IV-3]
Resource mass balance	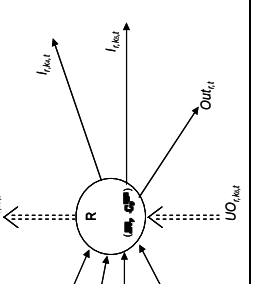	$R_{r,t} = R_{r,t-1} + \sum_{k \in K} O_{r,k,t-dd_k} - \sum_{k \in K} I_{r,k,t} + \sum_{k \in K} UO_{r,k,t-dd_k} - \sum_{i \in I} UI_{r,i,t} + In_{r,t} - Out_{r,t}$ $\forall r \in R, \forall t \in T$	[Eq. IV-4]
		$R_{r,0} = R0_r$ $\forall r \in R, \forall t \in T$	[Eq. IV-5]
		$Out_{r,t}^{\min} \le Out_{r,t} \le Out_{r,t}^{\max}$ $\forall r \in R, \forall t \in T$	[Eq. IV-6]
		$In_{r,t}^{\min} \le In_{r,t} \le In_{r,t}^{\max}$ $\forall r \in R, \forall t \in T$	[Eq. IV-7]
		$Out_{r,t}^{\min} = Out_{r,t}^{\max} = D_{r,t}$ $\forall r \in R, \forall t \in T$	[Eq. IV-8]
Task mass balance	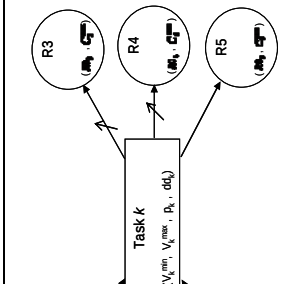	$B_{k,t} = \sum_{r \in R_k^{prod}} O_{r,k,t}$ $\forall k \in K, \forall t \in T$	[Eq. IV-9]
		$B_{k,t} = \sum_{r \in R_k^{cons}} I_{r,k,t}$ $\forall k \in K, \forall t \in T$	[Eq. IV-10]
		$O_{r,k,t} \le (\rho_{k,r}^{prod} + \mu_{k,r}^{prod}) B_{k,t}$ $\forall k \in K, \forall r \in R_k^{prod}, \forall t \in T$	[Eq. IV-11]
		$O_{s,k,t} \ge \rho_{k,s}^{prod} B_{k,t}$ $\forall k \in K, \forall r \in R_k^{prod}, \forall t \in T$	[Eq. IV-12]
		$I_{s,k,t} \le (\rho_{k,s}^{cons} + \mu_{k,s}^{cons}) B_{k,t}$ $\forall k \in K, \forall r \in R_k^{cons}, \forall t \in T$	[Eq. IV-13]
		$I_{s,k,t} \ge \rho_{k,s}^{cons} B_{k,t}$ $\forall k \in K, \forall r \in R_k^{cons}, \forall t \in T$	[Eq. IV-14]
Consumption of cumulative resource	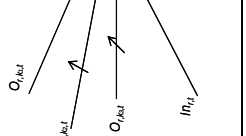	$UI_{s,k,t} = ufi_{k,s} W_{k,t} + uvi_{k,s} \sum_{\theta=t-p_k+1}^{t} B_{k,\theta}$ $\forall r \in R, \forall k \in K, \forall t \in T$	[Eq. IV-15]
Production of cumulative resource	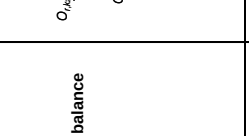	$UO_{s,k,t} = ufo_{k,s} W_{k,t} + uvo_{k,s} \sum_{\theta=t-p_k+1}^{t} B_{k,\theta}$ $\forall r \in R, \forall k \in K, \forall t \in T$	[Eq. IV-16]
Modeling of multimode equipment		$W_{k,t+1} = W_{k,t} + (1 - W_{k,t-1})$ $\forall j \in J^{start}, \forall k \in K_j^{op}, \forall t \in 2,..,T-1$	[Eq. IV-17]
		$W_{k',t} \ge W_{k,t+1} - W_{k,t}$ $\forall j \in J^{start}, \forall k \in K^{op}, \forall k' \in K_j^{start}, \forall t \in 2,..,T-1$	[Eq. IV-18]
		$W_{k',t} \le W_{k,t+1}$ $\forall j \in J^{start}, \forall k \in K^{op}, \forall k' \in K_j^{start}, \forall t \in 2,..,T-1$	[Eq. IV-19]

Table IV.5: Data required for developing ERTN representation

NAME	Notations	Matrix Structure [columns, rows]	Commentary
		Task node	
Minimum batchsize	V_k^{min}	[1, Number of Task]	
Maximum batchsize	V_k^{max}	[1, Number of Task]	
Task duration	p_k	[1, Number of Task]	
Delivery time	dd_k	[1, Number of Task]	
		Resource node	
Disjunctive resources	PE	[Number of Task, Number of equipment]	
Initial amount	R0	[1, Number of cumulative resource nodes]	
Maximum storage capacity	C_r^{max}	[1, Number of cumulative resource nodes]	
		Material Fixed Flow Arc	
Arc entering the task	$\rho_{k,r}^{cons}$	[Number of Task, Number of cumulative resource nodes]	$0 \le \rho_{k,r}^{cons} \le 1$ and $\mu_{k,r}^{cons} = 0$
Arc leaving the task	$\rho_{k,r}^{prod}$	[Number of Task, Number of cumulative resource nodes]	$0 \le \rho_{k,r}^{prod} \le 1$ and $\mu_{k,r}^{prod} = 0$
		Material Free Flow Arc	
Arc entering the task	$\mu_{k,r}^{prod}$	[Number of Task, Number of cumulative resource nodes]	$\rho_{k,r}^{prod} = 0$ and $\mu_{k,r}^{cons} = 1$
Arc leaving the task	$\mu_{k,r}^{cons}$	[Number of Task, Number of cumulative resource nodes]	$\rho_{k,r}^{cons} = 0$ and $\mu_{k,r}^{prod} = 1$
		Utility Arc	
Arc entering the task	$uf_{k,r}^{cons}$	[Number of Task, Number of cumulative resource nodes]	
Arc entering the task	$uv_{k,r}^{cons}$	[Number of Task, Number of cumulative resource nodes]	
Arc leaving the task	$uf_{k,r}^{prod}$	[Number of Task, Number of cumulative resource nodes]	
Arc leaving the task	$uv_{k,r}^{prod}$	[Number of Task, Number of cumulative resource nodes]	
		Import, Export and finished product demands	
Maximum export of resource	$Out_{r,t}^{max}$	[Number of time periods, Number of cumulative resource nodes]	
Minimum export of resource	$Out_{r,t}^{min}$	[Number of time period, Number of cumulative resource nodes]	
Maximum import of resource	$In_{r,t}^{min}$	[Number of time period, Number of cumulative resource nodes]	
Minimum import of resource	$In_{r,t}^{min}$	[Number of time period, Number of cumulative resource nodes]	
Product Demand	$D_{r,t}$	[Number of time period, Number of cumulative resource nodes]	$Out_{r,t}^{min} = Out_{r,t}^{max} = D_{r,t}$

IV.5 ERTN REPRESENTATION OF ILLUSTRATIVE EXAMPLE

The figure IV.26 presents the ERTN representation of the industrial unit that was established in the illustrative example*. The ERTN representation consists of 31 resource nodes and 16 task nodes whose details are as follows:

- 11 disjunctive resource nodes
    - 4 disjunctive nodes in production unit (Heater, Reactor 1, Reactor 2 and Separator) and 7 disjunctive nodes in utility system (Boiler, HPRV, MPRV, Turbine stage 1, Turbine stage 2, Turbine stage 3 and Pump).

- 20 cumulative resource nodes
    - 18 material resource nodes
        - 11 material resource nodes in the production plant: 4 feed material nodes (A, B, C and D), 4 intermediate material nodes (Hot A, Int AB, Int BC and impure P2) and 3 finished product material nodes (P1, P2 and P3).
        - 7 water derivate utility nodes (Water, HP steam, MP steam, Int MP steam, LP steam, Int LP steam and Exhst) in the utility system.

    - 5 cumulative utility nodes
        - 2 primary utility nodes (Fuel and electricity) in the utility system.
        - 3 water derivative nodes (HP steam, MP steam and LP steam). It is important to node that these water derivative nodes acts simultaneously as:
            - A material resource in the utility system
            - A utility resource in the production plant
- 16 task nodes
    - 8 task nodes in the production plant (T1-T8).
        - 1 task (T1) performed by Heater 1, 3 tasks (T2, T3 & T6) performed by reactor 1, 3 tasks (T4, T5 & T7) performed by reactor 2 and 1 task (T8) performed by separator.
    - 8 task nodes in the utility system (T9-T16).
        - 2 tasks (T9 & T10) performed by boiler, 1 task (T11) performed by HPRV, 1 task (T13) performed by MPRV, 1 task (T12) performed by Turbine stage 1, 1 task (T14) performed by Turbine stage 2, 1 task (T15) performed by Turbine stage 3 and 1 task (T16) performed by Pump.

* Only the ERTN representation of the illustrative example is discussed above. The complete development of the illustrative example (with mathematical equations and data matrixes) can be found in Appendix B.

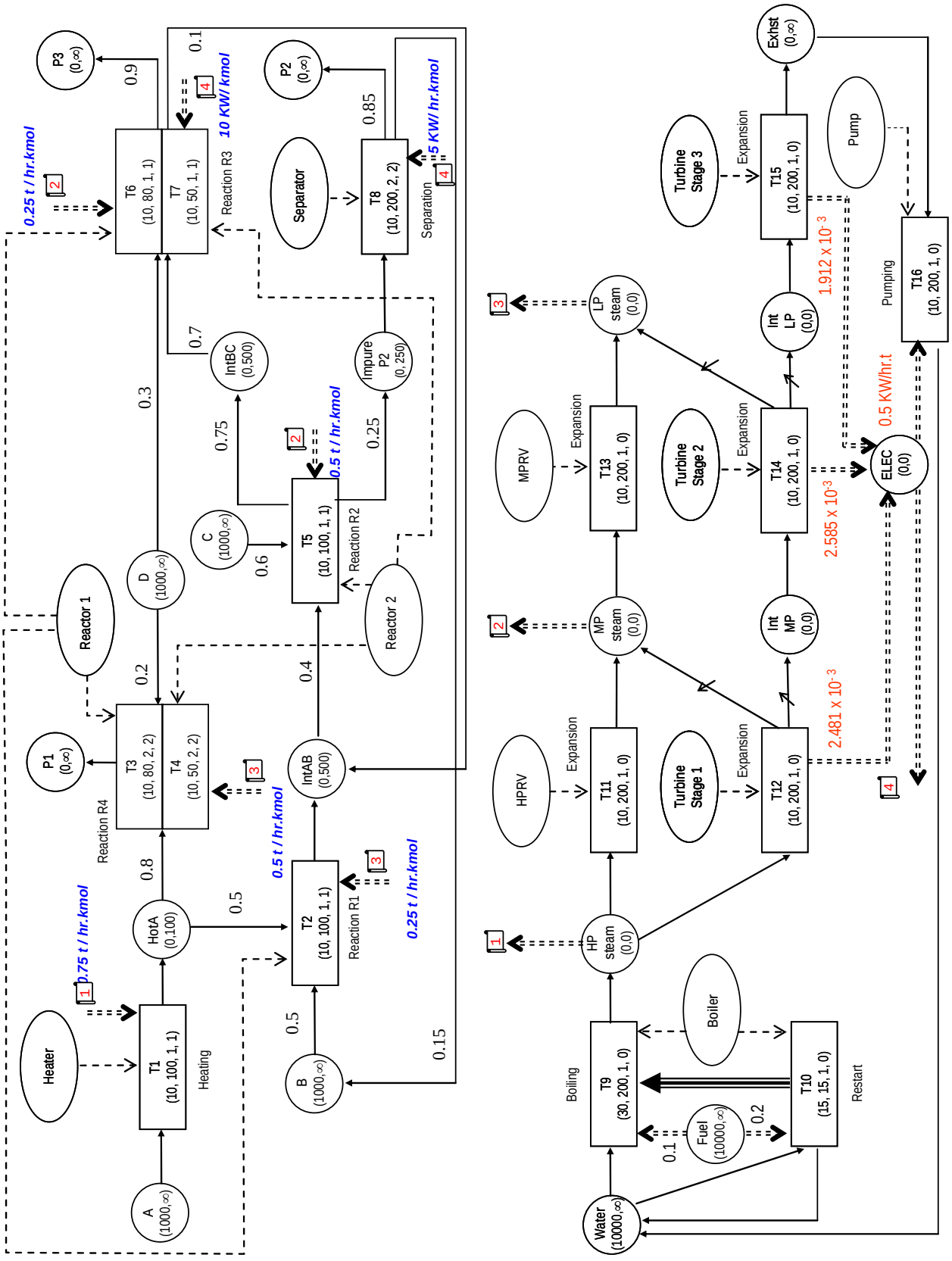

Figure IV.26: ERTN representation of the illustrative example

IV.6 CONCLUSION

The main advantage of ERTN framework is that it addresses the two major weaknesses present in RTN framework. Firstly, the concept of free material flow arc introduced in ERTN framework allows the outputs from the task to be in variable proportions of batchsize. This allows for accurate modeling of processing equipment such as multi-stage turbines whose outputs are evaluated by the optimization solver. Secondly, the concept of
"delivery time" allows the utility production and consumption to be treated as instantaneous process, thereby overcoming the phenomenon of "slack time" that is a permanent feature of the RTN framework.

Moreover, in the proposed ERTN framework there is a direct relationship between graphical representation and the mathematical formulation. Every entity in the graphical representation corresponds to a set of mathematical constraints. This opens the way for development of a truly general purpose scheduling algorithm and software. The preprocessor of the software will take inputs from the user, develop a graphical representation of industrial process, convert automatically the graphical representation to the mathematical constraints and in end present the results in graphic based post processor.

In the following chapter the ERTN representation will be used to address three process scheduling problems that have been often quoted in the academic literature. The effectiveness of the integrated approach (based on ERTN framework) will be established by carrying out a comparison with the sequential approach.

CHAPTER V

COMPARISON OF SEQUENTIAL & INTEGRATED APPROACHES: APPLICATION OF ERTN FRAMEWORK

SUMMARY

The Extended Resource Task Network (ERTN) framework developed in the previous chapter is used for the comparison of the sequential and integrated approaches for the scheduling of batch processes and the associated site utility system. In order to carry out the comparison of the two approaches, three different production plants are considered that use a CHP based site utility system to meet their utility requirements.

The first section presents the details about the three production plants and the CHP plant. To simplify the analysis it is assumed that CHP plant parameters remain same for all three production plants. The second section illustrates the methodology that is used for the comparison of the two approaches. The third section presents the computer applications used for the comparison of the two approaches. It consists of an optimization solver XPRESS-MP and an in-house computer application to analyze the results. Subsequently, the results comparing the two approaches on the basis of various criterions are presented in the fourth section of the chapter. The final section ends with a brief conclusion on the advantages of using the integrated approach.

RESUME

Le formalisme ERTN développé dans le chapitre précédent est exploité en vue de la comparaison entre l'approche séquentielle et l'approche intégrée pour l'ordonnancement des procédés batch et la centrale de production d'utilités associée. Afin de mener à bien cette comparaison, trois ateliers de production batch différents associés à la même unité de cogénération sont considérés.

La première section présente en détail chacun de ces trois exemples en s'appuyant sur le formalisme ERTN. La deuxième section décrit la méthodologie adoptée pour réaliser l'analyse comparative. La troisième section présente ensuite les applications logicielles développées pour cette comparaison. Par la suite, les résultats obtenus sur chacun des trois exemples sont présentés en détail et analysés. Enfin, la dernière section conclue en mettant en évidence les avantages de l'approche intégrée.

The chapter II established the necessity for developing an integrated approach for joint scheduling of a batch production plant and its associate site utility system. In order to model this relationship between the batch production plant and the site utility system, a new framework Extended Resource Task Network (ERTN) was developed and discussed in detail in the preceding chapter.

In this chapter, the ERTN framework is applied to three diverse batch plants. The batch plants are distinguished from one another on the basis of:

- complexity of the product recipe,
- number of resources available to perform the processing operations,
- multi-tasking potential of the processing equipment, etc.

It is assumed that the utility demands in all three batch production plants are sufficiently high to necessitate deployment of a CHP based site utility system. For each one of these three plants, the integrated approach will be compared with the sequential approach based on the results achieved during scheduling of batch production plant and the associated CHP plant.

V.1 PRESENTATION OF TWO MANAGEMENT PHILOSOPIES

An additional component of any industrial unit is the "Decision Management System (DMS)", which helps in coordinating operations of the entire unit. The Decision Management System is an *administrator* that provides different industrial unit components with the targets, oversees the operations being performed in these units and in meantime organizes the activities so as to maximize operational efficiency.

Traditionally, the management philosophy followed in the industrial unit depends on sequential resolution of three sub-problems (figure V.1).

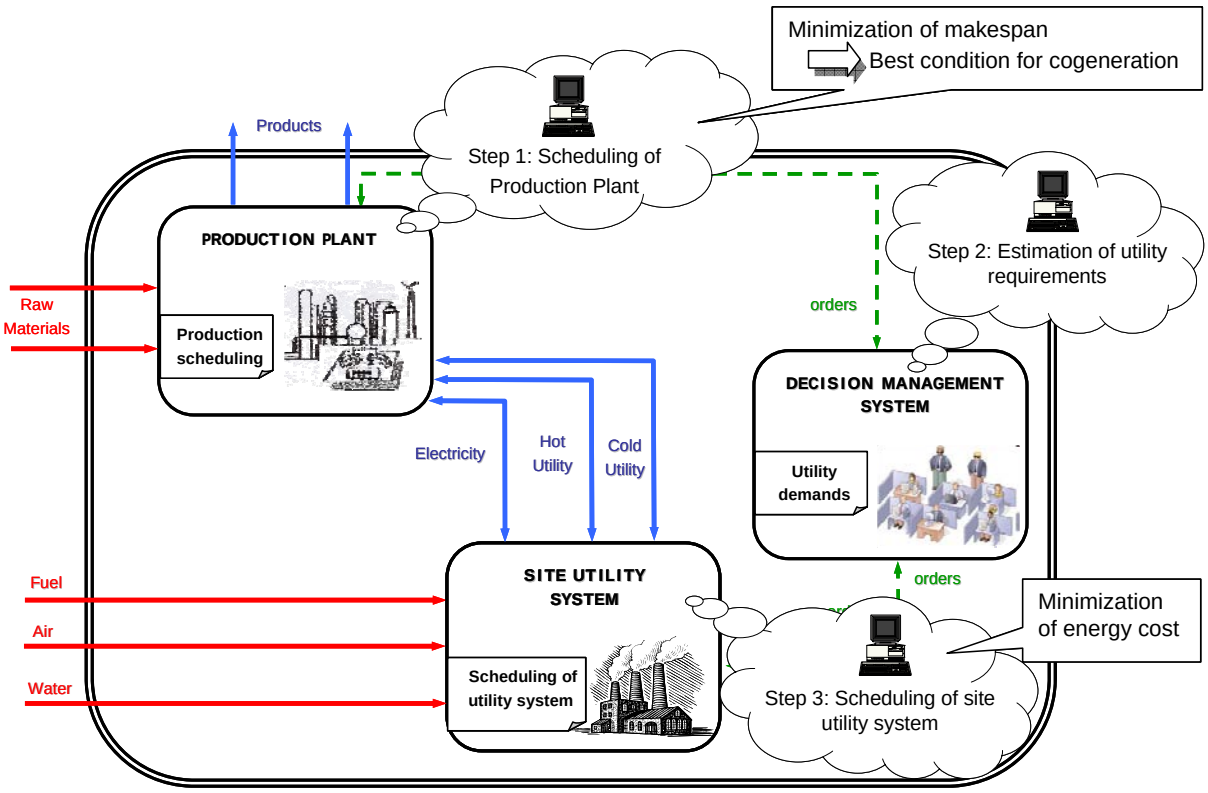

Figure V.1: Master / Slave Management Philosophy based on sequential problem resolution

- *Step 1:* First of all the production demands (orders) are communicated from Decision Management System to the production plant. Based on these demands, the production plant scheduling is carried out, which determines the quantity of raw materials and products to be manufactured / produced in the time horizon under consideration. The scheduling of production plant is carried out under some optimization criterion selected by production plant management that maximizes efficiency.
- *Step 2:* The scheduling of production plant is then communicated to the Decision Management System, which evaluates the utility requirements of the production plant. These utility requirements are then forwarded to the site utility system
- *Step 3:* The management of site utility system evaluates the operational scheduling that meets the utility requirements and also minimizes the energy cost.

It is evident from the above discussion that this management approach can be likened to *Master / Slave philosophy* which places emphasis solely on the production plant while the site utility system is considered only as a support function. As a result of the Master / Slave philosophy there is no feedback going from the site utility system to the production plant, which generally means that utility system operates at sub-optimal levels. This eventually leads to industrial unit incurring higher energy costs.

To address this deficiency, a novel *Integrated Management Philosophy* is proposed that performs the combined unified scheduling of all components of the industrial units (figure V.2). In the Integrated management philosophy the data from the production plant and site utility system is provided directly to the Decision Management System. Based on the data, the Decision Management System uses a unified joint scheduling framework (for example Extended Resource Task Network) to develop a site-wide scheduling of the industrial unit

.

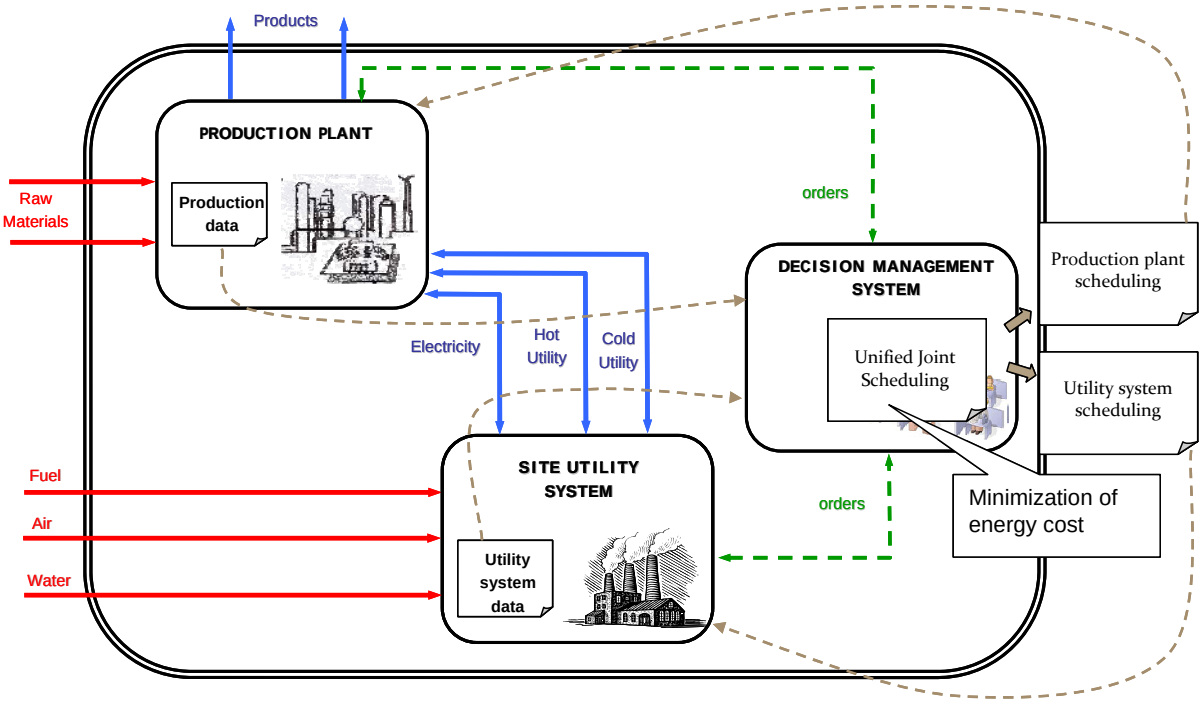

Figure V.2: Integrated Management Philosophy for unified joint scheduling

The site-wide scheduling leads to the scheduling of individual components of industrial unit such as the scheduling of production plant and scheduling of site utility system. These schedules are then communicated to the respective managements (for present study the management of production plant and management of site utility system), which operate their relevant components of industrial unit.

The criterion set for site-wide scheduling is the minimization of operational cost especially costs associated to fuel, electricity and emission of harmful gases (energy cost). It is important to note that product demands are provided by the market (in form of '*orders*') and are irrespective of management philosophy adopted. Hence, the quantity of finished products being produced remains same for Integrated management and Master / Slave management philosophies.

Note: For the rest of this chapter the Master / Slave management philosophy will be referred as '*Sequential Approach'* while Integrated management philosophy will be referred as '*Integrated Approach*'.

V.2 PRESENTATION OF THE EXAMPLES

In this section, three different production plants and their associated CHP based site utility system will be presented. To simplify the analysis, it is assumed that the same type of CHP plant is used by all three production plant. Hence, the CHP plant parameters will be the same for all three examples under consideration.

V.2.1 Production Plant

There are four key elements that are needed to completely analyze a production plant. They are:

- *Product recipe*, which describes set of chemical and physical steps required to make product.
- *Plant topology,* which portrays the set of processing equipment within which these steps are executed.
- The *resource allocation matrix,* which provides the details about the processing operations performed by each one of the processing equipments
- The *utility consumption matrix* which defines the utility subset consumed by processing equipment during execution of a processing operation.

To demonstrate how the graphical representation developed in the ERTN framework is able to illustrate all the above mentioned four features in one simple diagram, the first production plant will be discussed in detail. However, for the purpose of concision, only the ERTN representation of the two following examples will be presented in this chapter. The detailed information about product recipe, plant topology, resource allocation matrix and utility consumption matrix of these examples are provided in Appendix C.

V.2.1.1 Example 1

The production plant in example 1 converts 3 raw materials (A, B and C) into 6 intermediate products (D, E, F, G, H and I) and 3 finished products (P1, P2 and P3).). In total 9, processing operations (reactions 1-9) are required in production plant to convert raw materials into finished products. The product/general recipe of the production plant is shown in figure V.3.

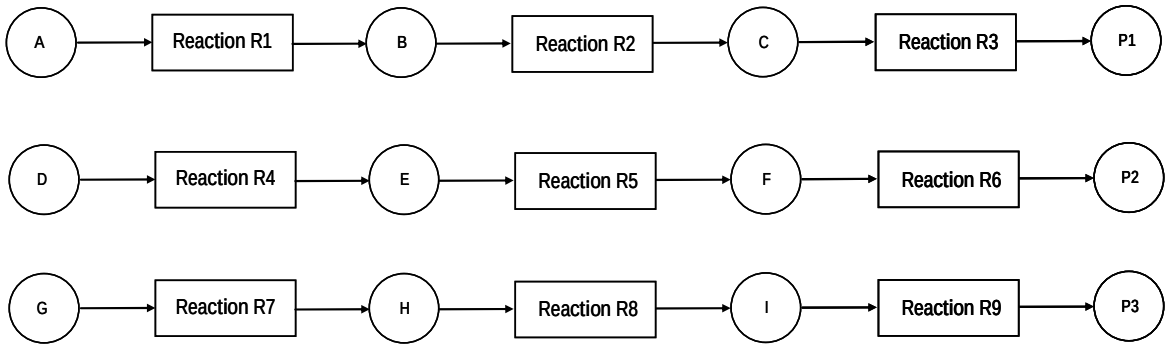

Figure V.3: STN representation of the product recipe

The product recipe shows a sequential structure in which no merging or splitting of batches takes place. This essentially means that the three different product lines operate independently from one another. Hence, the batch production plant in example 1 resembles a flow shop.

However, the plant topology in the figure V.4 shows that that the production plan uses only 5 processing equipments to perform the 9 process operations (reactions R1 – R9). Therefore, the production plant had to devise a schedule to meet the production demands and in the meantime keep operational costs as low as possible.

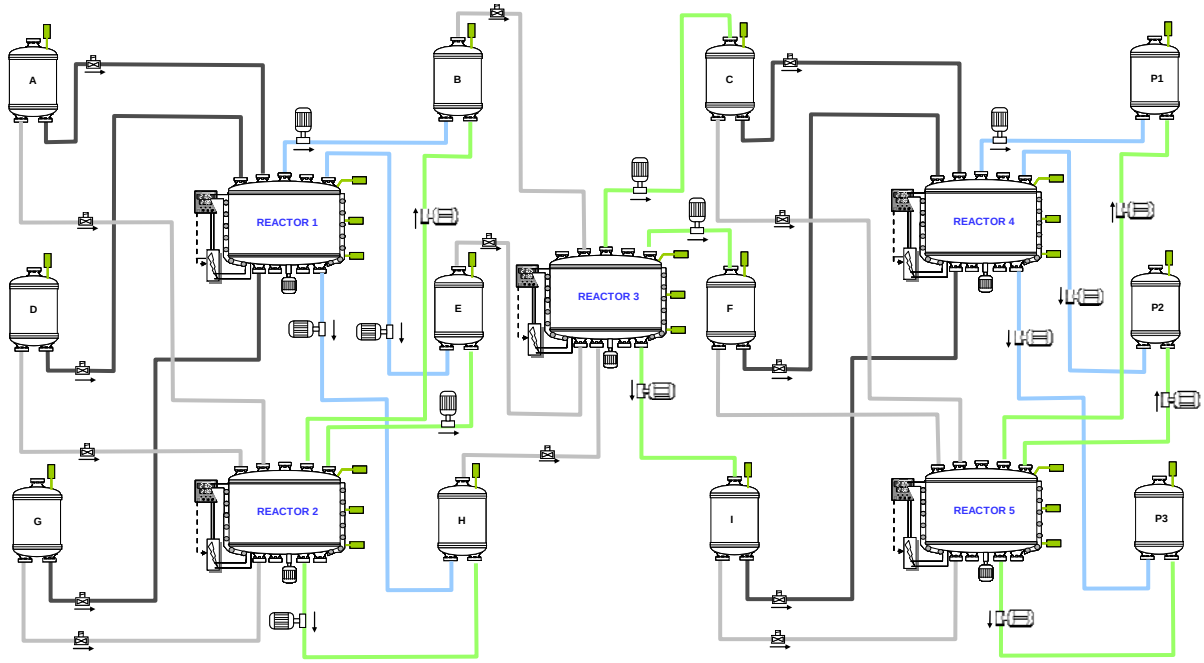

Figure V.4: Plant topology for example 1

To compliment the plant topology, a resource allocation matrix is used which clearly defines the equipments in which these processing operations (reaction R1 - R9) are performed. The resource allocation matrix is given in table V.1. The matrix clearly shows that in total 15 processing tasks are performed in the production plant.

Table V.1: Resource allocation matrix for example 1

Reaction (hr) / Reactor	R1	R2	R3	R4	R5	R6	R7	R8	R9
J1	2	-	-	3	-	-	1	-	-
J2	2	-	-	3	-	-	1	-	-
J3	-	2	-	-	2	-	-	3	-
J4	-	-	3	-	-	3	-	-	2
J5	-	-	3	-	-	3	-	-	2

Finally to complete the information about the batch production plant, a utility consumption matrix (table V.2) provides the details about the subset of utility consumed during execution of each processing task*.

Table V.2: Utility consumption matrix ($Cop_{u,k}$) for example 1

Tasks	1	2	3	4	5	6	7	8	9	10	11	12	13	14	15
LP steam	0	0	0	0	0	0	0	0	2	2	1.5	1.5	0	1	1
MP Steam	0	0	0	2	2	1.5	1.5	0	0	0	0	0	0	0	0
HP Steam	3	3	0	0	0	0	0	0	0	0	0	0	0	0	0
Electricity	0	0	0.1	.05	.05	0	0	.05	.05	.05	0	0	0.1	.05	.05

Now all the above mentioned information can be provided together in a single diagram using the ERTN framework. The ERTN representation of example 1 is shown in figure V.5.

* It is assumed that utility consumption is only dependent on batchsize.

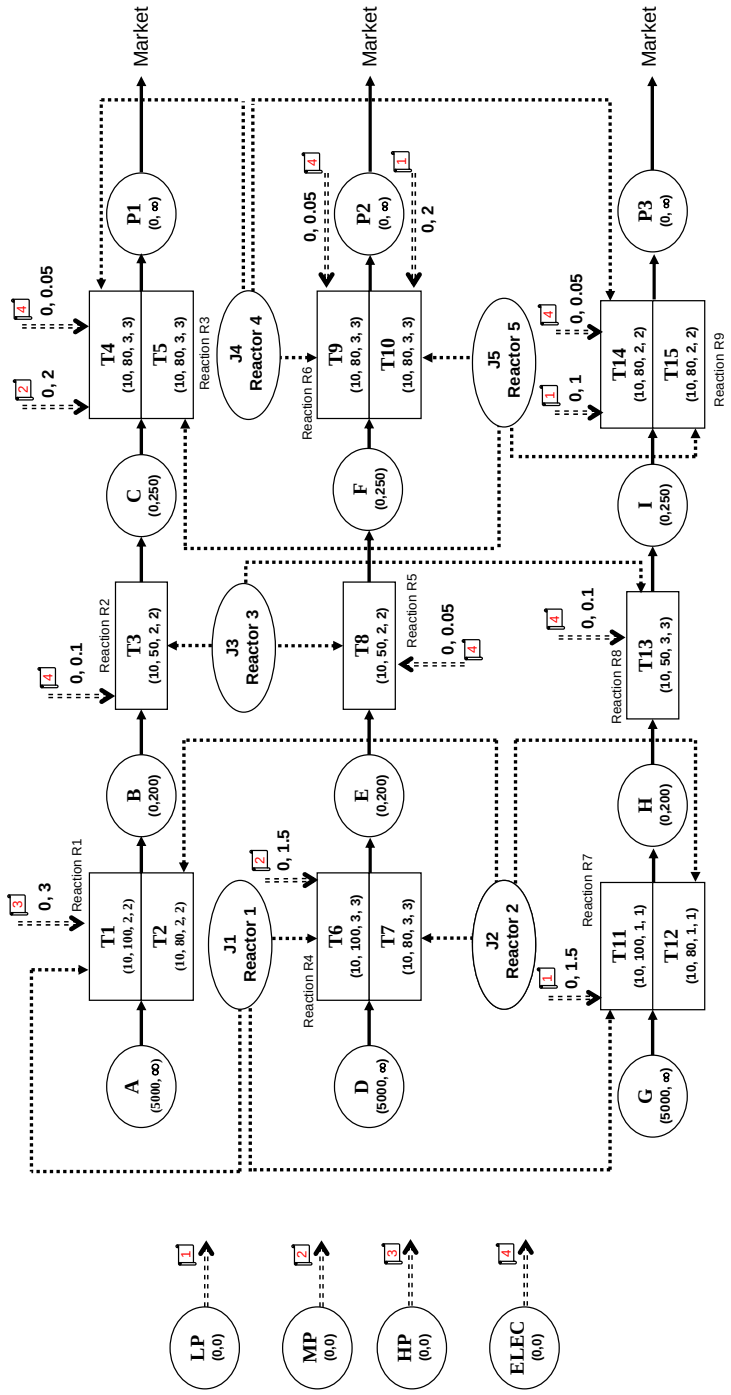

Figure V.5: ERTN representation of production plant for example 1

- The task node, cumulative resource node and the fixed flow arcs define the *product recipe*.
- The disjunctive resource nodes and arcs in conjunction with task nodes display the *plant topology*.
- The *resource allocation matrix* is provided by the task node which clearly displays the task duration.
- The *utility consumption matrix* is provided by the cumulative resources and utility resource arcs. Since the utility consumptions are only dependent on the batchsize the fixed coefficient on utility consumption arcs is always 0.

Hence, the ERTN representation is sufficient for describing all the key features and data requirements of the production plant.

V.2.1.2 Example 2

The production plant in example 2 converts 3 raw materials (A, B and C) into 4 intermediate products (Hot A, Int AB, Int BC and Impure P2) and 2 finished products (P1 and P2). The production plant uses 4 processing equipments to perform the 4 process operations (heating, reaction R1, reaction R2 and separator). In total 8 processing tasks are performed in the production plant. The production plant in example 2 resembles a "job shop" as the batches are merged and split. The ERTN representation of example 2 is shown in figure V.6 while the details about product recipe, plant topology, resource allocation matrix and the utility consumption matrix is provided in Appendix C.

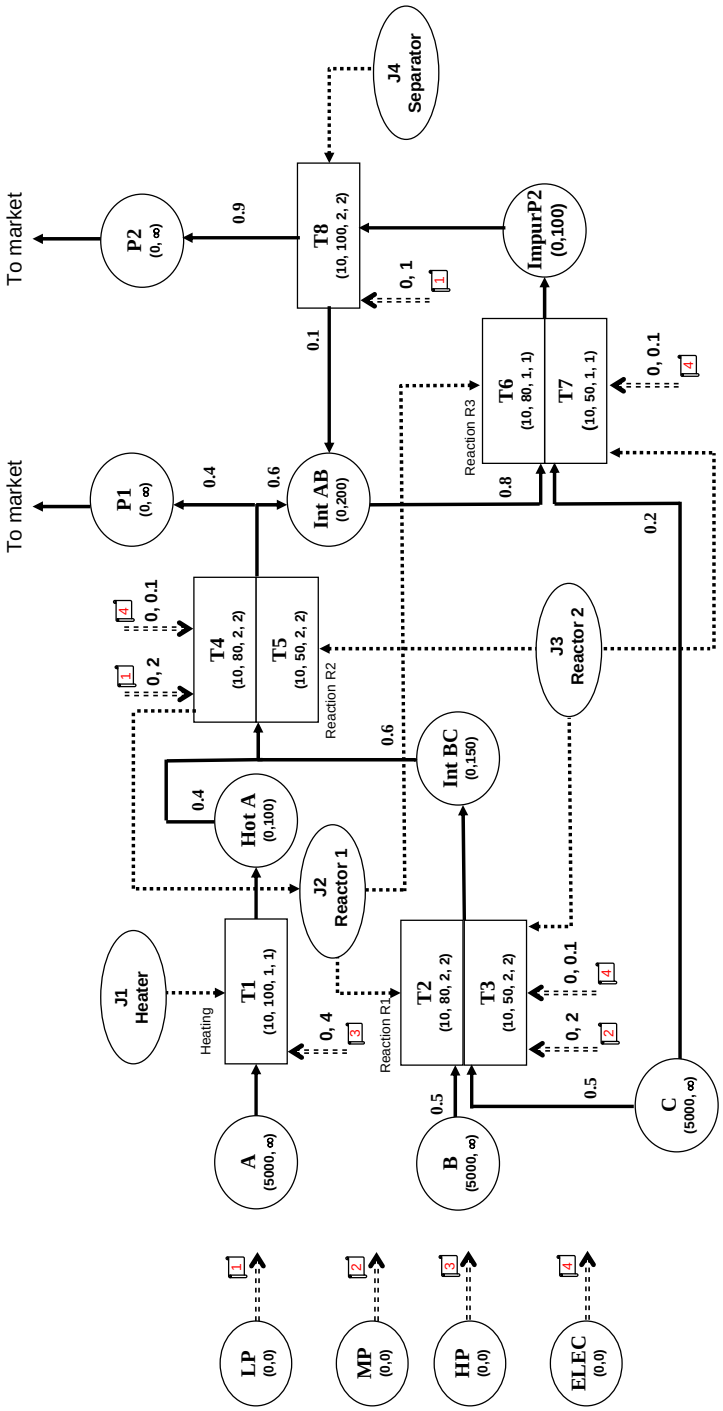

Figure V.6: ERTN representation of production plant for example 2

V.2.1.3 Example 3

The production plant in example 3 converts 4 raw materials (A, B, C and G) into 7 intermediate products (Int A, Int B, Int AB, E, Int EC, D and F) and 2 finished products (P1 and P2). The production plant uses 6 processing equipments to perform 7 process operations. In total, 11 processing tasks are performed in the production plant. Like example 2, the production plant in example 2 also resembles a "job shop". The ERTN representation of example 2 is shown in figure V.7 while the details about product recipe, plant topology, resource allocation matrix and the utility consumption matrix is provided in Appendix C.

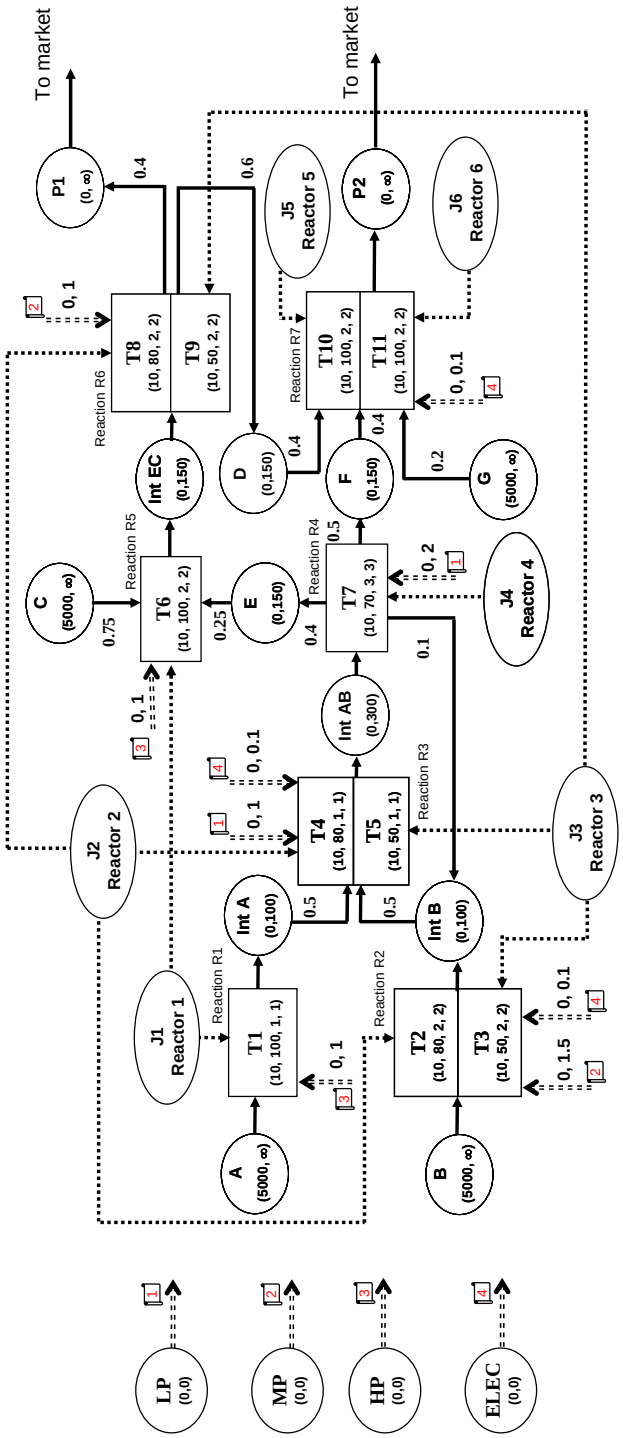

Figure V.7: ERTN representation of production plant for example 2

V.2.1.4 Comparison of the three examples

The table V.3 provides a brief summary of the three production plants. The example 1 is an illustration of a flow shop while example 2 and 3 represent job shop. Moreover, in example 1 all the processing equipments are multitasking while in example 2 and 3 only half of the processing equipment are multi-tasking. In order to estimate the complexity of the scheduling problem posed by each example, an empirical formula is used.

$$Sharing\ Coefficient = \frac{No.\ of\ tasks}{No.\ of\ operations \times No.\ of\ equipments} \qquad \text{[Eq. V-1]}$$

The closer the value of sharing coefficient to 1, greater is the complexity of the scheduling model. According to the empirical rule the complexity of example 2 is greatest, followed by complexity of example 1 and example 3 respectively.

Table V.3: Comparison of three examples

	Number of				Structure	Sharing Coefficient
	Operations	Products	Equipments	Tasks		$\frac{No.\ of\ tasks}{No.\ of\ operations \times No.\ of\ equipments}$
Example 1	9	3	5	15	Flow shop	$\frac{15}{9\times5} = 0.33$
Example 2	5	2	4	8	Job shop	$\frac{8}{5\times4} = 0.4$
Example 3	7	2	6	11	Job shop	$\frac{11}{7\times6} = 0.26$

The utility consumption matrix is arbitrarily chosen for each example. However, attempt has been made to divide the consumption of utility subset equally over the processing operations. Principally the utility demands are divided into two broad categories

- Processing operations that uniquely require only single type of utility i.e. either HP steam, MP steam, LP steam and electricity.
- Processing operations that require multiple type of utility i.e. simultaneously needing steam and electricity.

V.2.2 CHP Plant

V.2.2.1 General functioning

The CHP based utility system considered for this study is based on the model proposed by Soylu *et* al. [2006]. The functioning of the CHP plant is similar to the one already discussed in chapter III. The product recipe of the CHP plant is presented in figure V.8. In total there are five process operations:

- Four process operations boiling, expansion 1, expansion 2 and expansion 3 that convert water into high pressure (HP) steam, medium pressure (MP), low pressure (LP) and exhaust (Ehst) steam respectively.
- One process operation "pumping" that returns the exhaust steam in form of the water back into water reservoir. Physically, this would means passing the saturated exhaust steam through cooling towers and then using a pump to return the condensate back into the water reservoir.

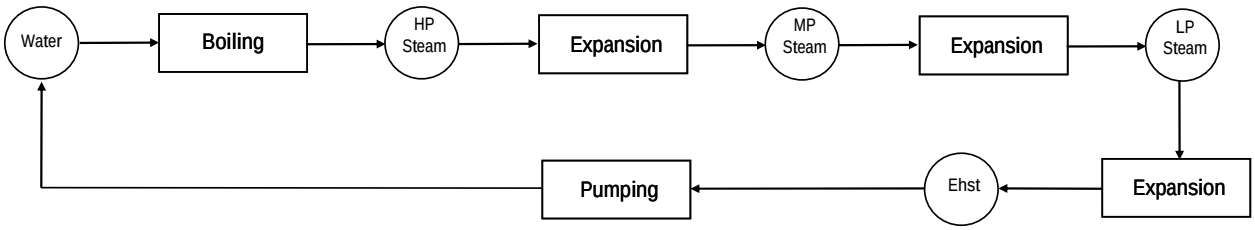

Figure V.8: STN representation of the CHP plant

The CHP plant uses two boilers for generating HP steam, two multi-stage steam turbines for generating electricity, one HPRV for converting HP steam into MP steam and one MPRV to convert MP steam into LP steam. Alternatively the MP and LP steam requirements of the production plant can be fulfilled by using steam extraction from multi-stage turbine. The CHP plant topology is presented in figure V.9.

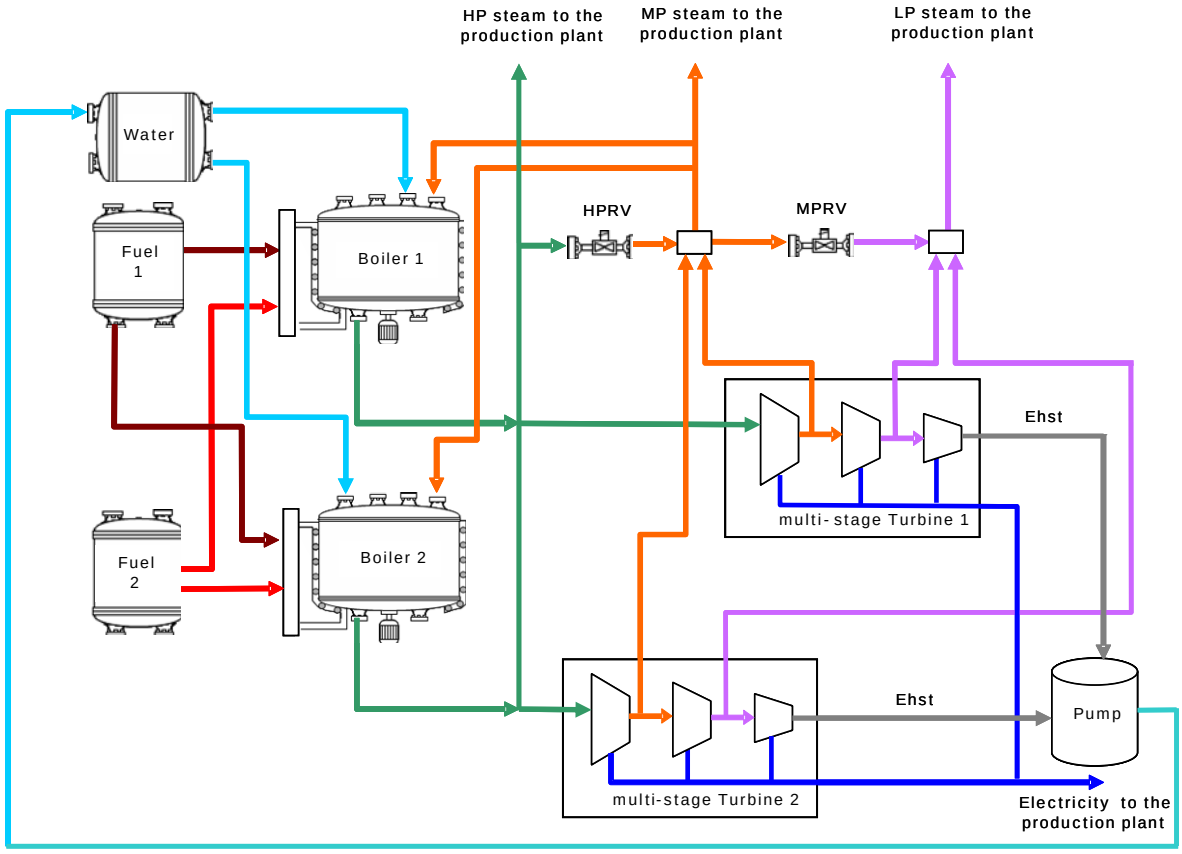

Figure V.9: CHP based site utility system

Each stage of the turbine can be considered as separate processing equipment and the resulting resource allocation matrix is given in table V.4. The matrix clearly shows that in 11 processing equipment are used to perform the 5 processing operations. Since all equipments are mono-tasking therefore total 11 processing tasks are performed in the CHP plant.

Table V.4: Resource allocation matrix for CHP plant

Process (hr) / Equipment	Boiling	HP steam expansion	MP steam expansion	LP steam expansion	Pumping
Boiler 1 (J1)	1	-	-	-	-
Boiler 2 (J1)	1	-	-	-	-
HPRV (J3)	-	1	-	-	-
Turbine 1 stage 1 (J4)	-	1	-	-	-
Turbine 2 stage 1 (J5)	-	1	-	-	-
MPRV (J6)	-	-	1	-	-
Turbine 1 stage 2 (J7)	-	-	1	-	-
Turbine 2 stage 2 (J8)	-	-	1	-	-
Turbine 1 stage 3 (J9)	-	-	-	1	-
Turbine 2 stage 3 (J10)	-	-	-	1	-
Pumping (J11)	-	-	-	-	1

V.2.2.2 Boiler operations

In the CHP plant, all processing operations are instantaneous with the exception of boiler task that may need to go through a restart phase. Therefore, the boiler operations require a special consideration. It is assumed that boiler *j* has uninterrupted supply of air and water. The fuel supplied to the boiler where it is burnt to convert water into high pressure (HP) steam. The boiler requires a certain amount of medium pressure steam (to pre-heat water) to carry out its operations. Although multi-fuel fired boiler operation is considered only one type of fuel is used in the boiler during time period *t*.

The boiler operation is instantaneous as long as the boiler is in active state. However, once shut down (idle state) boiler operation is no longer instantaneous and the boiler needs to go through a restarting phase. During the restart phase, the boiler *consumes* fuel but does not produce the HP steam of required *quality*. Moreover, the fuel consumption in a boiler is a function of amount of high pressure (HP) steam produced, calorific value of fuel, boiler efficiency and the enthalpy difference between superheated steam and feed-water.

$$I = \frac{\Delta h_{diff} \cdot XHP}{cc \cdot \eta} \qquad \text{[Eq. V-2]}$$

Definition

I : *amount of fuel consumed in boiler*
XHP : *amount of HP steam produced*
Δh_{diff} : *enthalpy difference between superheated steam and feed-water*
cc : *calorific value of fuel*
η : *boiler efficiency*

Equation [Eq. V-2] is essentially a non-linear equation but simplifying assumptions are used to develop a representative linear equation. It is assumed that steam pressures and temperatures are fixed at the boiler inlet and exit, thus turning enthalpy difference into a parameter. However there are still two variables in the equation boiler efficiency η and fuel consumption *I*.

Soylu et al. [2006] solved this problem by using the assumption that boiler efficiency remained constant irrespective of load factor. However, boiler efficiency is significantly less when it operates at part load, i.e., operating at less than design capacity. In order to include the effect of efficiency variation with varying load factor and at the same time guarding the condition of linearity *piecewise linear approximation* is used as shown in figure V.10.

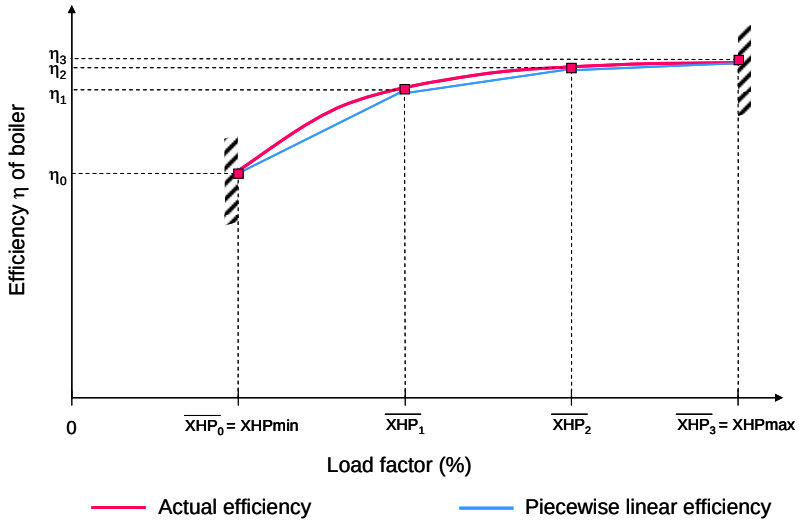

Figure V.10: Efficiency as a function of boiler load factor

The location on the piecewise linear approximation then curve quantifies fuel consumption with the corresponding amount of HP steam being generated. To include the piecewise linear in the CHP plant model, it suffices to divide the boiler task into Q different boiling task tasks (equal to the number of piecewise linear curves).

For this study three, linear pieces are considered (Q = 3). Therefore, linear approximation leads to the following curve (figure V.11).

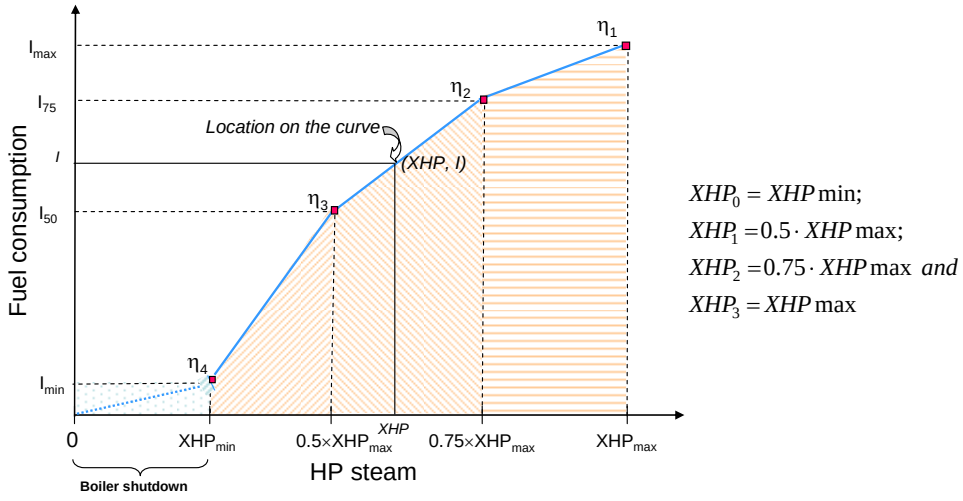

Figure V.11: Fuel consumption as a function of HP steam generated in boiler

$XHPmin_j$ is the minimum amount of steam that can be produced by the boiler. Below this steam level, it is not economically viable to operate the boiler and hence, it is shutdown.

Hence, for this study a single boiler task is replaced by 3 different tasks. The V_k^{min} and V_k^{max} of each task node are defined by the end points on the piecewise linear curve (figure V.12).

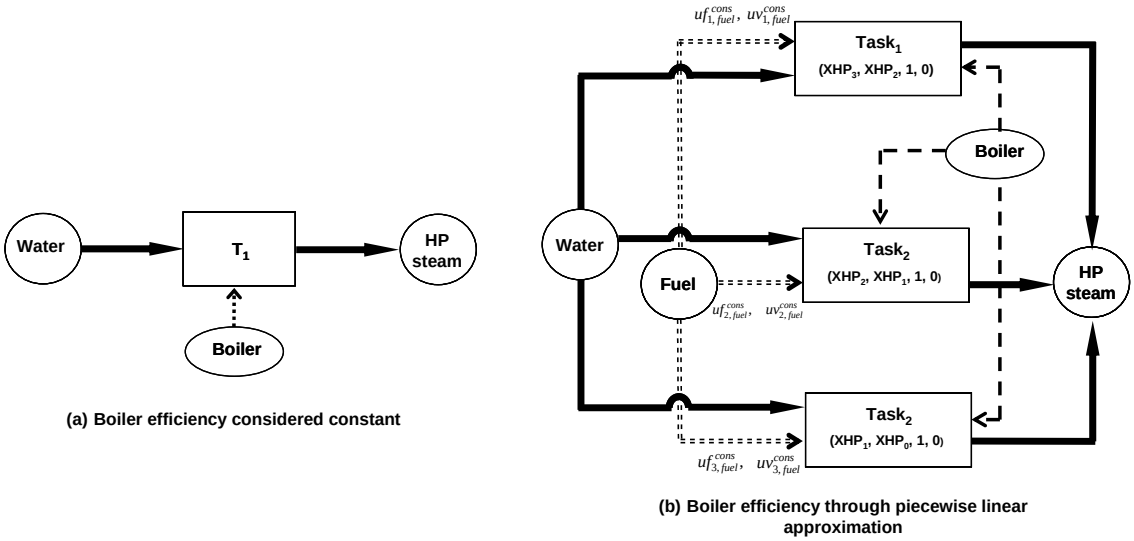

Figure V.12: Equivalence of piecewise linear approximation in form of ERTN representation

Moreover, the coefficients $uf_{k,fuel}^{cons}$ *and* $uv_{k,fuel}^{cons}$ are determined by following methodology (figure V.13).

- Knowing the abscissa end points of the V_k^{min} and V_k^{max} along with calorific value of fuel, boiler efficiency and the enthalpy difference the ordinate end points for fuel consumption I_k^{min} and I_k^{max} are calculated.
- Then the slope of the piecewise curve is calculated using equation [Eq. V-3]. This corresponds to the variable coefficient $(uv_{k,fuel}^{cons})$.

$$m = \frac{I_k^{\max} - I_k^{\min}}{V_k^{\max} - V_k^{\min}} \qquad \text{[Eq. V-3]}$$

- Finally the fixed coefficient $(uf_{k,fuel}^{cons})$ is determined by finding the y-intercept on the ordinate axis using equation [Eq. V-4].

$$c = I_k^{\min} - V_k^{\min} \cdot \frac{I_k^{\max} - I_k^{\min}}{V_k^{\max} - V_k^{\min}} \qquad \text{[Eq. V-4]}$$

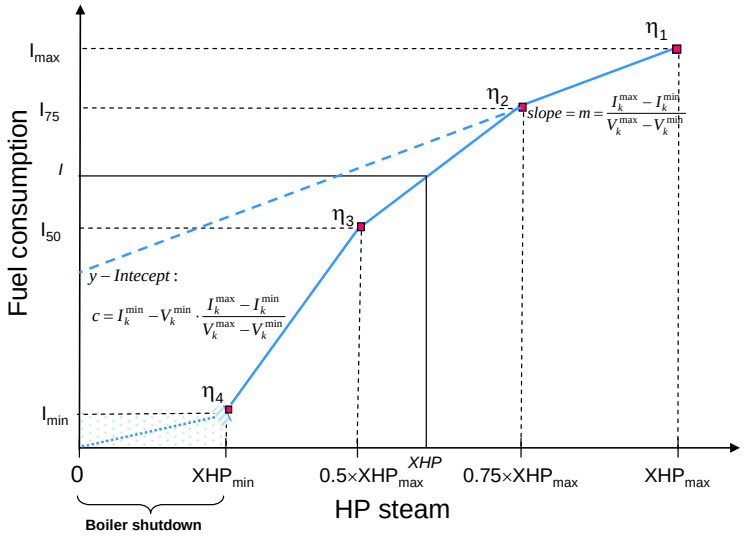

Figure V.13: Determining the fixed and variable coefficients of cumulative utility arc for boiler tasks

The ERTN representation of the CHP plant is shown in figure V.14. The boiler operation has been simplified for purpose of clarity. The elaborated representation of the boiler operation can be found in figure V.15.

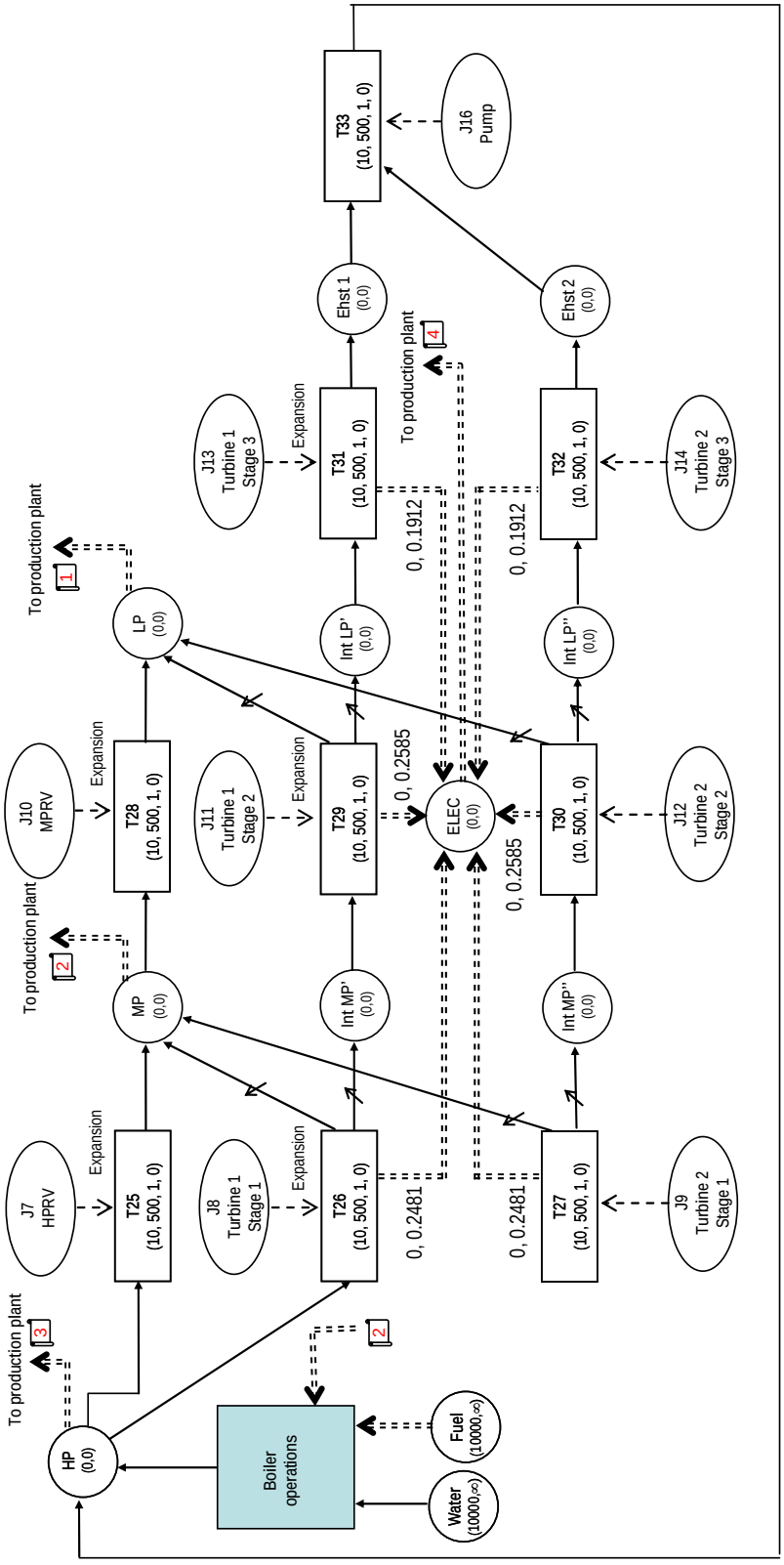

Figure V.14: ERTN representation of the CHP plant

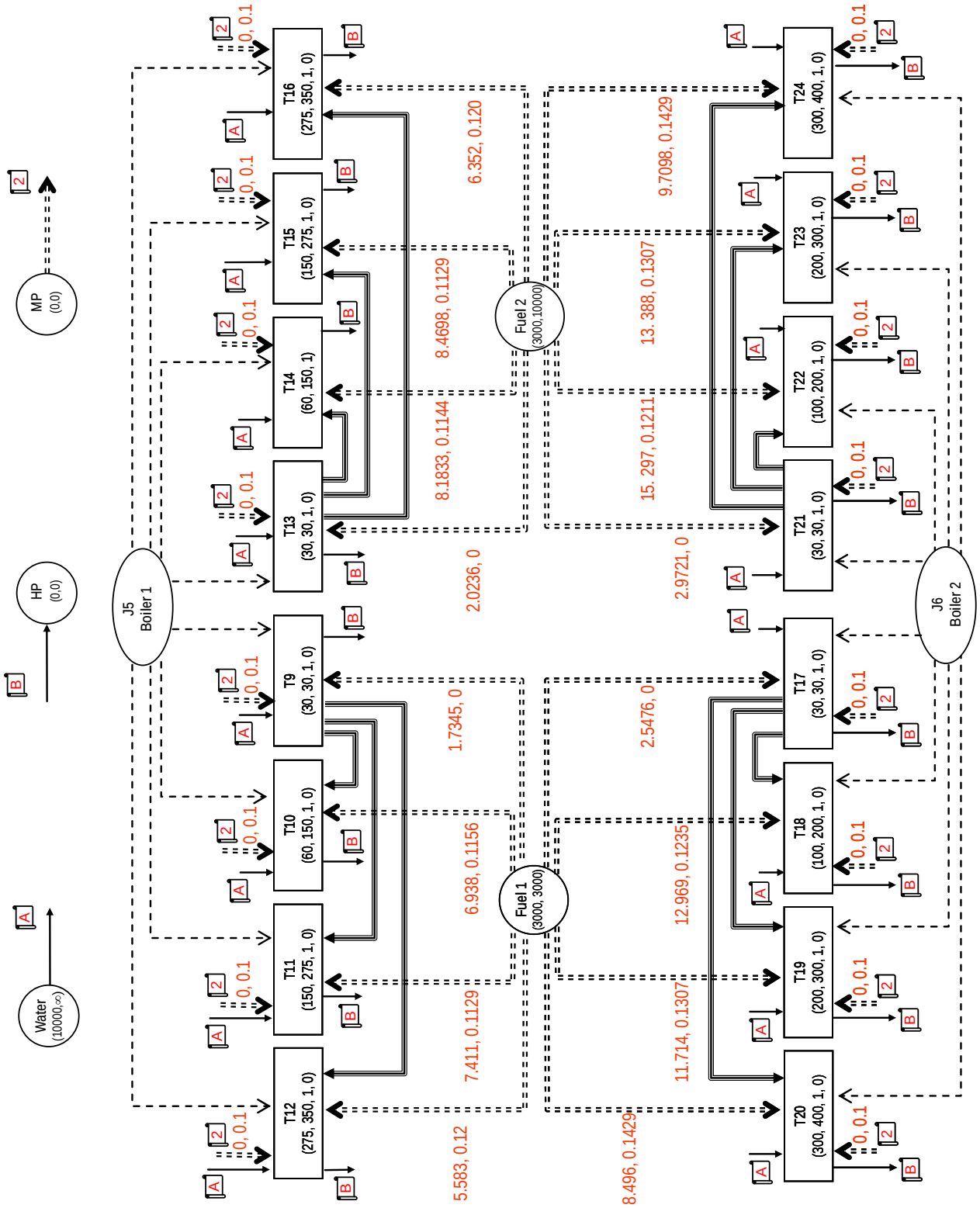

Figure V.15: Elaborated ERTN representation of the boiler task

Another important feature of boiler operation is the harmful gas emissions which are released during burning of fossil fuel especially those of SOx and green house gas (GHG) emissions. Even though these emissions have not been presented in figure V.15 (for the sake of readability of the ERTN diagram) the generic nature of the ERTN framework allows for their modeling and calculation. A complete boiler operation is shown in figure V.16, which uses fuel to convert material resource water into resource HP steam and in the meantime produces two additional utility resources SOx and GHG. The values on the utility arc give the emission coefficient for each task in the boiler. The complete detail for each emission coefficients for the CHP plant under consideration is provided in the table V.5 below:

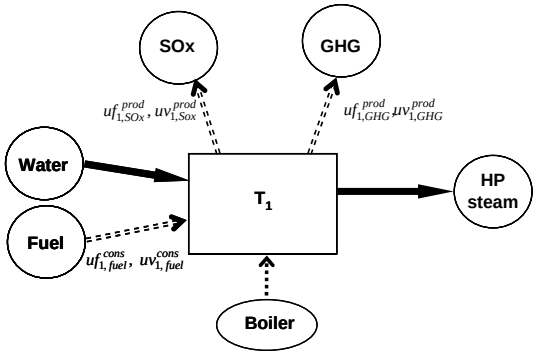

Figure V.16: Detail about boiler emissions and their calculations

Table V.5: Fixed and variable coefficients for utility arc

Fuel 1					
		SO_x		**GHG**	
Task		$uf^{prod}_{k,r}$	$uf^{prod}_{k,r}$	$uf^{prod}_{k,r}$	$uf^{prod}_{k,r}$
T9	Boiler 1 restart	2.24E-02	0.00E+00	4.28E+00	0.00E+00
T10	Boiler 1 operating at $XHP_{min} \le XHP \le 0.5 \cdot XHP_{max}$	8.97E-02	1.49E-03	1.71E+01	2.85E-01
T11	Boiler 1 operating at $0.5 \cdot XHP_{max} \le XHP \le 0.75 \cdot XHP_{max}$	9.58E-02	1.46E-03	1.83E+01	2.78E-01
T12	Boiler 1 operating at $0.75 \cdot XHP_{max} \le XHP \le XHP_{max}$	7.22E-02	1.55E-03	1.38E+01	2.96E-01
T17	Boiler 2 restart	3.29E-02	0.00E+00	6.28E+00	0.00E+00
T18	Boiler 2 operating at $XHP_{min} \le XHP \le 0.5 \cdot XHP_{max}$	1.68E-01	1.60E-03	3.20E+01	3.05E-01
T19	Boiler 2 operating at $0.5 \cdot XHP_{max} \le XHP \le 0.75 \cdot XHP_{max}$	1.51E-01	1.69E-03	2.89E+01	3.22E-01
T20	Boiler 2 operating at $0.75 \cdot XHP_{max} \le XHP \le XHP_{max}$	1.10E-01	1.85E-03	2.10E+01	3.52E-01
Fuel 2					
		SO_x		**GHG**	
Task		$uf^{prod}_{k,r}$	$uf^{prod}_{k,r}$	$uf^{prod}_{k,r}$	$uf^{prod}_{k,r}$
T13	Boiler 1 restart	5.80E-04	0.00E+00	3.76E+00	0.00E+00
T14	Boiler 1 operating at $XHP_{min} \le XHP \le 0.5 \cdot XHP_{max}$	2.32E-03	3.86E-05	1.52E+01	2.13E-01
T15	Boiler 1 operating at $0.5 \cdot XHP_{max} \le XHP \le 0.75 \cdot XHP_{max}$	2.48E-03	3.77E-05	1.57E+01	2.10E-01
T16	Boiler 1 operating at $0.75 \cdot XHP_{max} \le XHP \le XHP_{max}$	1.87E-03	4.01E-05	1.18E+01	2.23E-01
T21	Boiler 2 restart	8.51E-04	0.00E+00	5.52E+00	0.00E+00
T22	Boiler 2 operating at $XHP_{min} \le XHP \le 0.5 \cdot XHP_{max}$	4.33E-03	4.13E-05	2.84E+01	2.25E-01
T23	Boiler 2 operating at $0.5 \cdot XHP_{max} \le XHP \le 0.75 \cdot XHP_{max}$	3.91E-03	4.37E-05	2.49E+01	2.43E-01
T24	Boiler 2 operating at $0.75 \cdot XHP_{max} \le XHP \le XHP_{max}$	2.84E-03	4.77E-05	1.80E+01	2.66E-01

V.3 PROCESS FOR COMPARING SEQUENTIAL AND INTEGRATED APPROACHES

To demonstrate the advantages for developing an integrated approach, it is necessary to compare the results of this approach with those achieved using the traditional sequential approach. This section aims to describe the procedure used for this comparison.

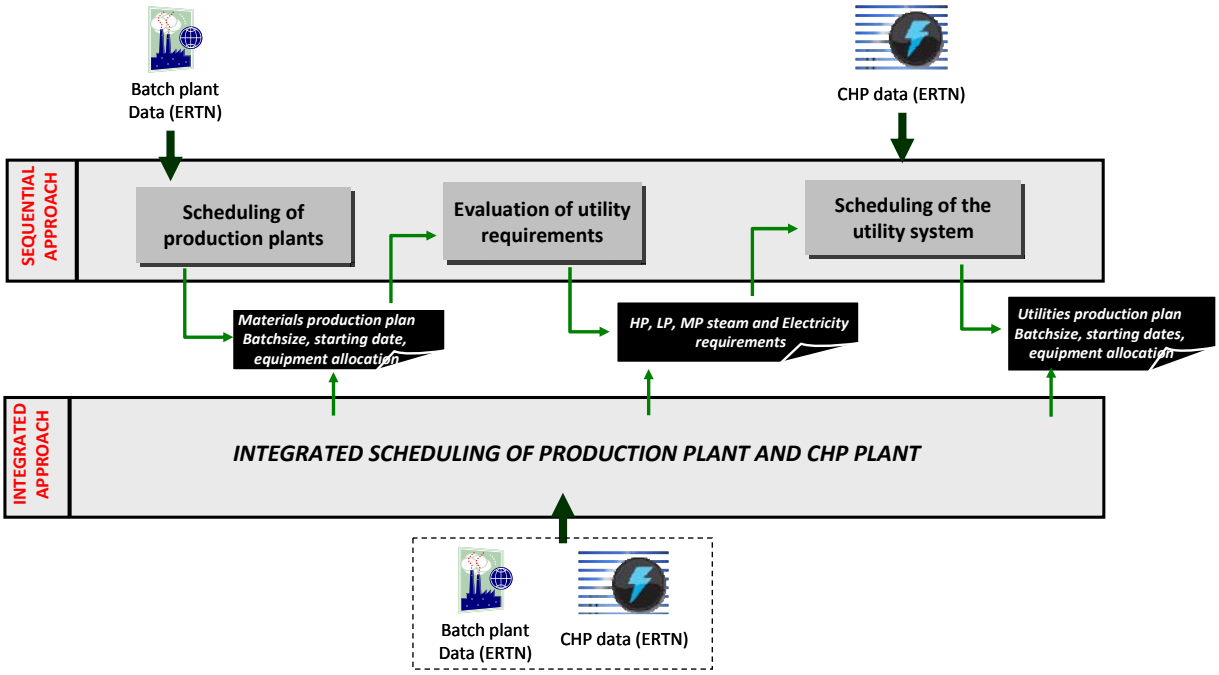

Figure V.17: Comparison of the sequential and integrated approaches

V.3.1 Input Data

The input data for both approaches are principally the same. It is necessary to provide data concerning three aspects:

- Input data concerning the batch plant and the CHP plant via the ERTN.
- The scheduling horizon
- The finished product demands

V.3.1.1 Scheduling horizon

The duration of time period is fixed at 1 hour. It is supposed that the batch production plant operates 24 hours a day (3 shifts of 8 hours each) and the horizon of interest is fixed at 80 hours. The scheduling horizon of 80 hours is divided in to 10 cycles (each of 8 hour duration).

V.3.1.2 Finished product demand

Demand pattern

It is assumed that the production plant must fulfill a certain demand of final products at the end of each cycle (figure V.18).

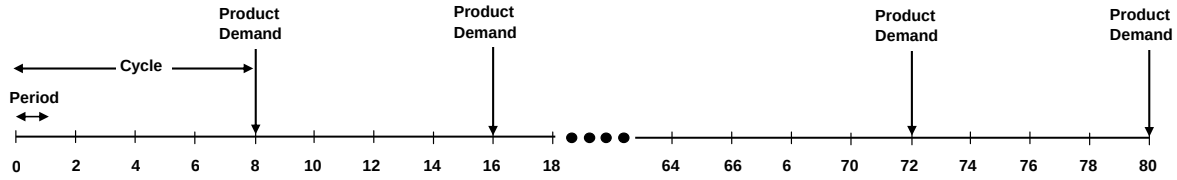

Figure V.18: Scheduling horizon and finished product demand pattern

Demand profile and load ratios

In order to compare the integrated and the sequential approaches, it is necessary to develop demand profiles for each production plant over the scheduling horizon. This in turn requires the assessment of the maximum production capacity of the finished products for the production plant. For this, at first the proportion of each one of the *N* finished products is fixed. Then, scheduling constraints developed in ERTN framework (equations [Eq. IV-1] to [Eq. IV-4]) are used along with objective function to maximize the quantity of finished products that can be produced by the production plant.

Knowing the maximum capacity, 5 scenarios are discussed in which production plant operates at 50%, 60%, 80%, 90% and 100% load ratio.

Definition

Load ratio is the fraction of the quantity of finished products currently being produced to the maximum production capacity of the production plant.

$$Load\ Ratio = \frac{Current\ quantity\ of\ \ finished\ \ products\ being\ \ produced}{Maximum\ capacity\ of\ \ the\ \ production\ plant\ to\ \ produce\ \ finished\ \ products}$$

V.3.2 Sequential vs. Integrated Approach

V.3.2.1 Sequential approach

Knowing the characteristics of the production plant and the demand profiles, the sequential approach uses the sequential resolution of the three sub problems.

Step 1: Scheduling of the production plant

This step involves uniquely the scheduling of production plant and assuming that utilities are available in unlimited quantities. The scheduling model is deduced from the ERTN representation of the production plant by assuming that all cumulative arcs weighed by null values. The objective function for the step 1 chosen in this study for attaining the scheduling of production plant is to *minimize* the inventory. The term of the objective function is defined by the following equation:

$$C_{stock} = \sum_{t=1}^{T} \sum_{r \in R} l_r \cdot R_{r,t} \qquad \text{[Eq. V-5]}$$

Definition

l_r : Inventory coefficient for resource *r* that is used to obtain the tardiness starting date

C_{stock} : Storage of resource *r* during the time horizon

Step 2: Evaluation of utility requirements

Based on the obtained task scheduling and given the utility requirement of each task, the overall utility demand is estimated a posteriori. The consumption of utility *u* by task *k* at time period θ is defined by the following equation:

$$UCons_{u,k,t} = Cop_{u,k} \cdot \sum_{\theta=t}^{t-p_k+1} B_{k,\theta} \qquad \forall k \in K, \forall u \in U, \forall t = 1,..,T \qquad \text{[Eq. V-6]}$$

Definition

$Cop_{u,k}$: utility u consumed by task k

$UCons_{u,k,\theta}$: consumption of utility u by a task k at time θ relative to start of task

$B_{,k,\theta}$: batchsize of task k started at beginning of time period t

This equation can be explained using a simple example.

Example

Consider a task k starting at time period t, consuming utility u starting at beginning of time period 3 and finishing at the end of time period 5 (figure V.16). The value of binary variable $W_{k,\theta}$ is "1" for time period 3 and "0" for time period 4 & 5. Hence, the decision variable $B_{k,\theta}$ representing (batchsize) is also active during time period 3 and is inactive for time periods 4 & 5.

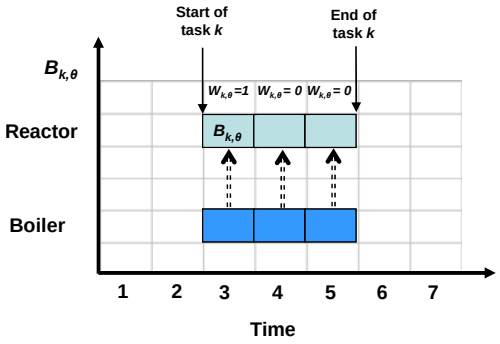

Figure V.19: Explanation for using the summation term while calculating utility consumption

However, the Reactor treats the batchsize $B_{k,\theta}$ over three time periods and thereby naturally requires utility over three time periods as well. To incorporate this nuance it is necessary to utilize summation of batchsize over the entire time period.

Then considering the fact that several tasks can consume the same utility at a given time period, the global consumption of utility u at time period θ can be determined through using equation [Eq. V-7].

$$CGlob_{u,t} = \sum_{k} UCons_{u,k,t} \qquad \forall k \in K, \forall t \in 1,..,T \qquad \text{[Eq. V-7]}$$

Definition

$CGlob_{u,k}$: Overall consumption of utility u during time period t

Step 3: Operational planning of the utility system

Given the requirement for each utility subset (steam, electricity, etc.), the final step aims at carrying out the scheduling of the CHP based site utility system. In this step the mathematical model is directly deuced from the ERTN representation of the CHP plant (figure V.14).

To optimize the operational planning of the utility system, a criterion has been defined to minimize the operational cost of the CHP plant. The operational cost function is as follows:

$$COST = \sum_{t} \sum_{k}^{K_{boil}^{rstrt} \cup K_{boil}^{Op}} UI_{Fuel\,1,k,t} \cdot cf_{Fuel\,1} + \sum_{t} \sum_{k}^{K_{boil}^{rstrt} \cup K_{boil}^{Op}} UI_{Fuel\,2,k,t} \cdot cf_{Fuel\,2} + \sum_{t} In_{Elec,t} \cdot CEL$$
$$+ \sum_{t} \sum_{k}^{K_{boil}^{rstrt} \cup K_{boil}^{Op}} UI_{sox\,1,k,t} \cdot CSOX \qquad \text{[Eq. V-8]}$$

Definition

$cf_{Fuel\ 1}$: *cost of fuel 1*
$cf_{Fuel\ 2}$: *cost of fuel 2*
CEL : *cost of electricity*
$CSOX$: *cost of* SO_x *emissions*
K_{boil}^{rstrt} : *collection of restart tasks carried out in the boiler*
K_{boil}^{op} : *collection of tasks carried out in the boiler other than restart tasks*

The objective cost function is composed of three terms:

- Fuel burnt in boilers $\sum_{t}\sum_{k}^{K_{boil}^{rstrt}\cup K_{boil}^{Op}} UI_{Fuel\ 1,k,t}\cdot cf_{Fuel\ 1} + \sum_{t}\sum_{k}^{K_{boil}^{rstrt}\cup K_{boil}^{Op}} UI_{Fuel\ 2,k,t}\cdot cf_{Fuel\ 2}$
- The electricity purchase cost $\sum_{t} In_{Elec,t}\cdot CEL$
- The SO_x emission cost $\sum_{t}\sum_{k}^{K_{boil}^{rstrt}\cup K_{boil}^{Op}} UI_{sox\ 1,k,t}\cdot CSOX$

V.3.2.2 Integrated approach

As illustrated in figure V.17, the integrated approach simultaneously carries out the scheduling of batch plant and the site utility system. The model used in this step is simply deducted from the global ERTN (batch plant and CHP plant) and the optimization criterion is same as formerly used in equation [Eq. V-8].

V.3.3 Comparison Criteria

To objectively compare the scheduling results obtained through both approaches, various criteria need to be examined. These criteria are as follows:

V.3.3.1 Energy costs and emissions

The primary criterion for the comparison is the energy costs i.e. equation [Eq. V-8]. To judge the impact on the environment, the emissions of SO_x and green house gases (GHG) are also compared.

V.3.3.2 Optimal use of cogeneration

The utilities to the production plant are supplied by the CHP plant. The scheduling of a CHP plant is very subtle as they are generally more thermally efficient and economically viable when they are operating near their peak cogeneration capacity, i.e. maximizing the use of turbine to meet the process steam requirements as well as generating electricity. In order to quantify the amount of cogeneration, the following utility flows ratios (depicting flow of HP, MP, LP steam and electricity) are used as the set of criteria that require analysis. The schematics of the CHP plant is presented in figure V.20 which clearly display the different utility flows.

Table V.6: Description of utility flow ratios

Flow ratio	Equations	Description
Turbine Ratio	$\left(\frac{\sum_{t=1}^{T}\sum_{j\in TURB} TXHP_{t,j}}{\sum_{t=1}^{T}\sum_{j\in BOIL}\sum_{i\in FUEL} XHP_{t,j,i} - \sum_{t=1}^{T} DemHP_t}\right)\times 100$	Ratio of HP steam entering turbine to net steam available after fulfilling the HP steam demands.
Electricity Ratio	$\left(1-\frac{\sum_{t=1}^{T} ELP_t}{\sum_{t=1}^{T} DemEL_t}\right)\times 100$	The net percentage of electricity produced by the turbines of CHP plant.
HPRV Ratio	$\left(\frac{\sum_{t=1}^{T} LXHP_{t,j}}{\sum_{t=1}^{T}\sum_{j\in BOIL}\sum_{i\in FUEL} XHP_{t,j,i} - \sum_{t=1}^{T} DemHP_t}\right)\times 100$	Ratio of HP steam passing through high pressure relief valves to net steam available after fulfilling the HP steam demands.
LPRV Ratio	$\left(\frac{\sum_{t=1}^{T} LXMP_t}{\sum_{t=1}^{T} LXMP_t + \sum_{t=1}^{T}\sum_{j\in TURB} XLP_{t,j}}\right)\times 100$	Ratio of LP steam passing trough low pressure relief valve to the total LP steam generated to meet the low pressure demands.

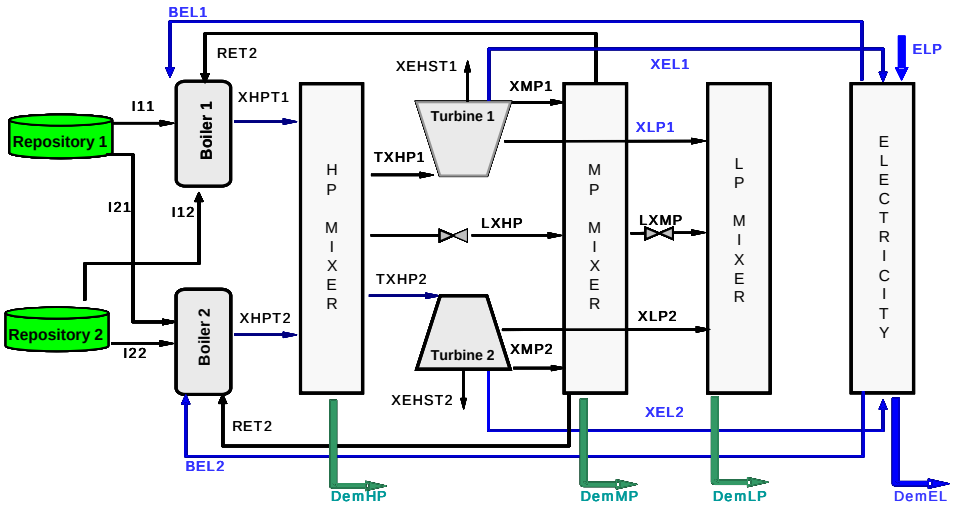

Figure V.20: Schematics of CHP based site utility system

V.3.3.3 Convergence history

The important aspects in this regard are convergence time and the gap between the optimal solution and the bounded solution. As a rule all the simulations which had not completely converged after thirty minutes were stopped except for those whose gap was more than 10 %. In their case these simulations were allowed to run until they achieved a gap of less than 10%.

Definition

Total iteration time: is the actual CPU run time of the optimization solver i.e. the time given to the solver to find the optimum solution

Best solution time: is the time taken by the solver to find the best available solution. For example, consider a case where 15 minutes into run time the solver finds a solution which is not improved till the end of total iteration time. In this case the best solution time is 15 minutes.

V.3.4 Relevance of Comparison Criteria

Since the sequential and integrated approaches are radically different, the criterion used to compare these approaches need to be judiciously chosen. *Energy cost* (fuel cost, electricity purchase cost and emission penalty cost) is one major criterion for the comparison of the two approaches. Because of its inherent nature, the integrated approach leads to optimum exploitation of utility resources and thereby resulting in lower energy costs. Therefore, for an accurate comparison between the two approaches, the sequential approach must be provided the most favorable conditions for cogeneration.

This is achieved by carrying out the scheduling of production plant using objective function that minimizing inventory (equation [Eq. V-5]). This effectively reduces the *'makespan'* in the production plant and groups together the production tasks close to one another. The grouping of tasks abets the use of cogeneration which would not be case if the production tasks were dispersed over scheduling time horizon. Hence, after providing the ideal conditions of cogeneration for sequential approach the energy cost is a valid comparison criterion.

Similarly various flow ratios demonstrate the effective *utilization of cogeneration* and provide an effective criterion for comparison between the sequential and integrated approach. The last comparison criterion is the *convergence history* that needs to evaluated, if the proposed integrated approach is to be implemented in the real industrial environment.

V.4 COMPUTER APPLICATION DEVELOPED

V.4.1 Solving the Scheduling Problem

Figure V.21 presents the procedure used to solve the scheduling problem for both sequential and integrated approach. It is important to recall that thanks to the ERTN framework, only one computer code needs to be developed that contains all the equations used in "BatchPlantAlone.mos, CHPAlone.mos and GlobalSystem.mos". The type of problem being solved using the code depends entirely on the input data file (.dat) which contains all the necessary parameters of production plant and CHP plant under consideration. These parameters have already been presented in table IV.6.

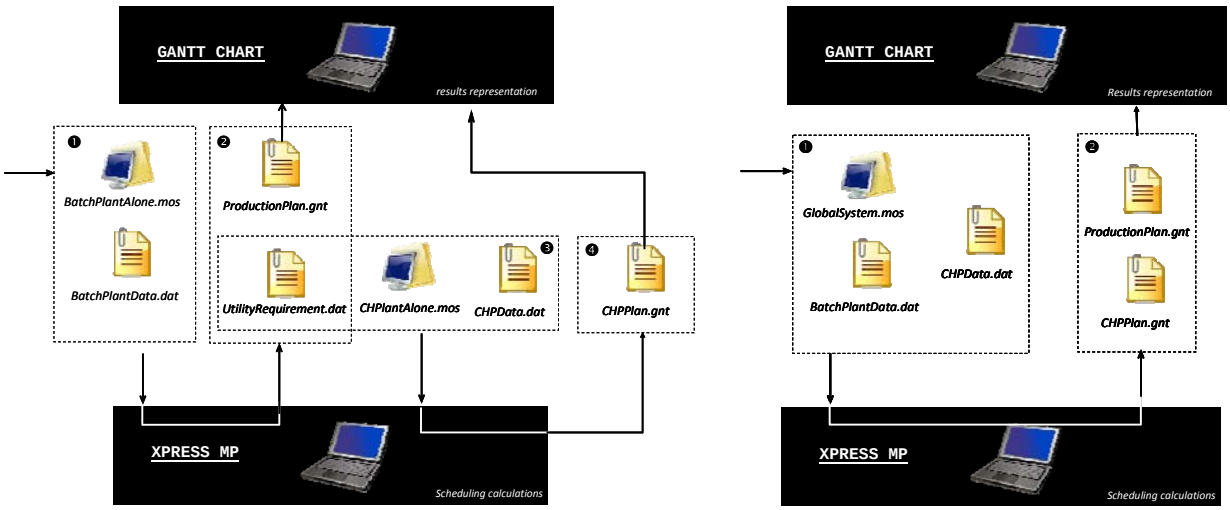

Figure V.21: Solving procedure for sequential and integrated approaches

The details about the XPRESS-MP computer applications developed for solving the scheduling problem using sequential and integrated approaches are given below:

- BatchPlantAlone.mos
  This program uses equations [Eq. IV-1] to [Eq. IV-4] and objective function equation [Eq.V-5] to determine production scheduling (step 1 of sequential approach). Then equations [Eq.V-6] and [Eq.V-7] are used to evaluate the utility requirements (step 2 of sequential approach).
- CHPAlone.mos
  On the basis of the utility requirements developed in the above mentioned computer programs "CHPAlone.mos" *CHP.mos* uses equations [Eq. IV-1] to [IV-19] of the ERTN framework but rather than producing finished products the objective is to meet utility demand targets. The objective function that is minimized while meeting the utility targets is equation [Eq. V-8] (step 3 of sequential approach).
- GlobalSystem.mos
  INTEG.mos based on the ERTN framework is used to simultaneously perform scheduling of the production plant and site utility system by concurrently solving equations IV-1 to IV-18 and equation V-5 in its entirety.

V.4.2 Gantt Chart: A Computer Application for Analysis of the Results

An in-house computer application called "GanttChart" has been developed in Laboratoire de Geneie Chimique (LGC) to display and analyze the results of the scheduling problem attained through optimization solver XPRESS-MP. The application "GanttChart" uses a Visual C++ based graphical interface that allows user to analyze different features of production plant and CHP plant. As illustrated in figure V.22, the computer application has two main windows.

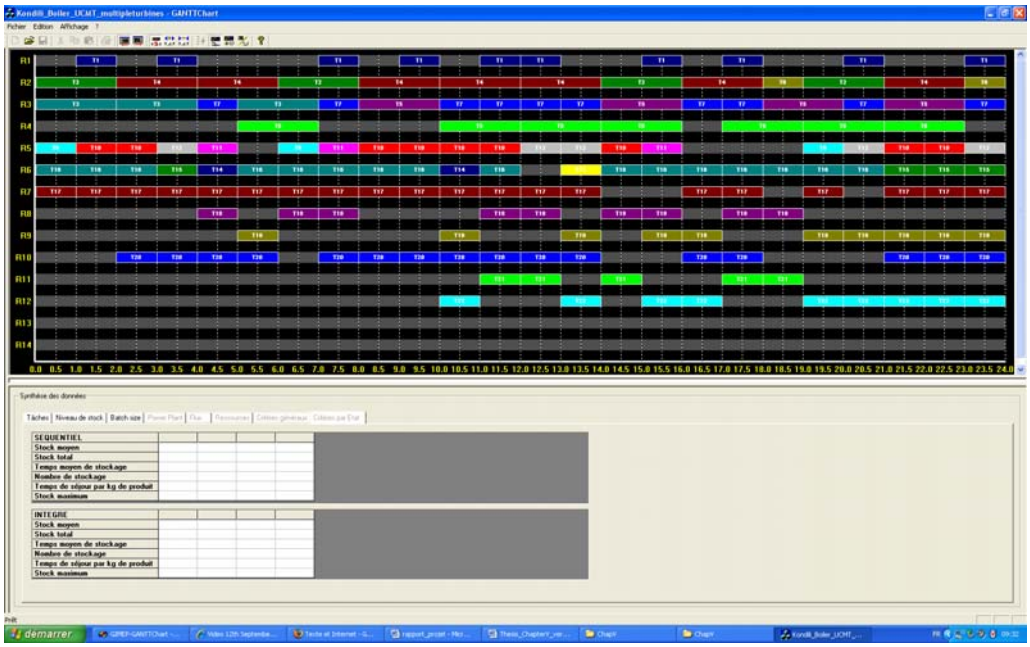

Figure V.22: Computer application "GanttChart" based on VC++ based interface

The upper window displays the joint scheduling of the production plant and site utility system. This is the main feature of the application, which indicates the occupancy of processing equipment over the time

horizon. The type of the task and its duration are indicated by using rectangular blocks. The empty spaces indicate inactivity of the processing equipment during the time period.



Figure V.23: Joint scheduling Gantt chart for production plant and site utility system

The lower window, "data synthesis" provides information for analysis of results provided by the solver XPRESS-MP in greater detail. The window is composed of various tabs each analyzing a distinct feature of the scheduling problem like details about different tasks, resources, batchsizes, etc.

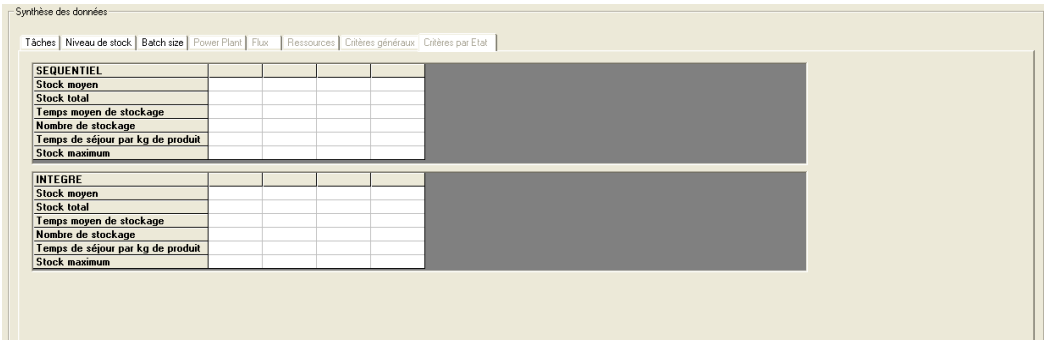

Figure V.24: Analysis of the scheduling problem in greater detail using window "Data Synthesis"

This part of computer application is still in course of development. However some of the tabs that have already been developed are briefly presented below:

- Task tab

  This tab displays the details about the processing tasks. The information displayed is the task identification number, period during which the task starts duration of the task, processing equipment where the task is performed and batchsize of the task.

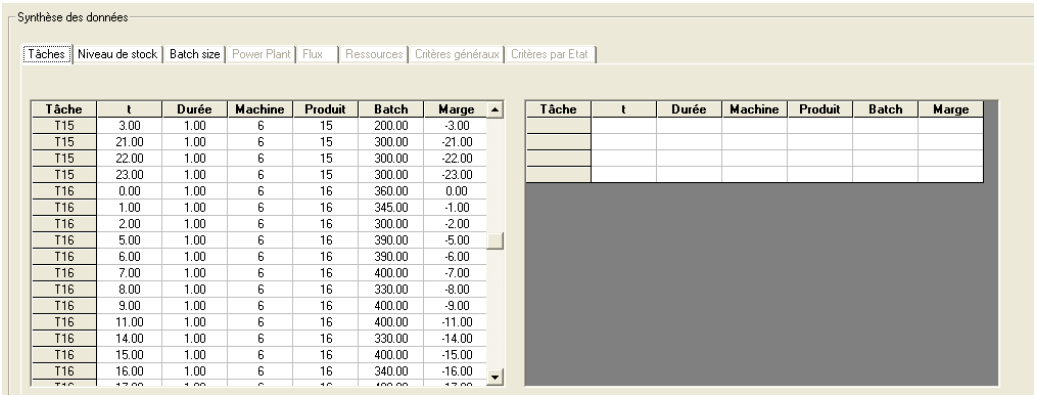

Figure V.25: Information provided by "Task" tab

- Storage tab

  This tab displays the graphical evolution of resource storage in each resource node over the time horizon. For example the figure V.26 displays fuel consumption over the time horizon.

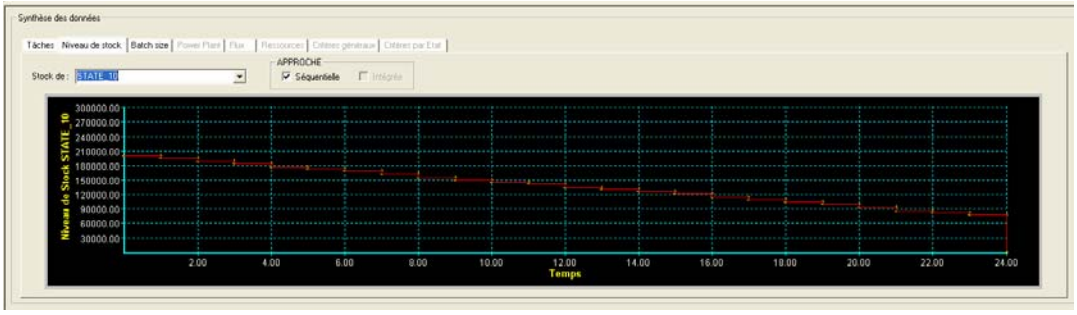

Figure V.26: Information provided by "Storage" tab

- Batchsize tab

  This tab displays the graphical representation of the batchsize carried out by each processing tasks. For example figure V.27 displays batchsize of processing task 17 over the time horizon.



Figure V.27: Information provided by "Batchsize" tab

- Power plant

  For each time period, this tab provides the details about utility flows, fuel supply to boiler and fuel purchase directly on the schematic representation of the CHP plant.

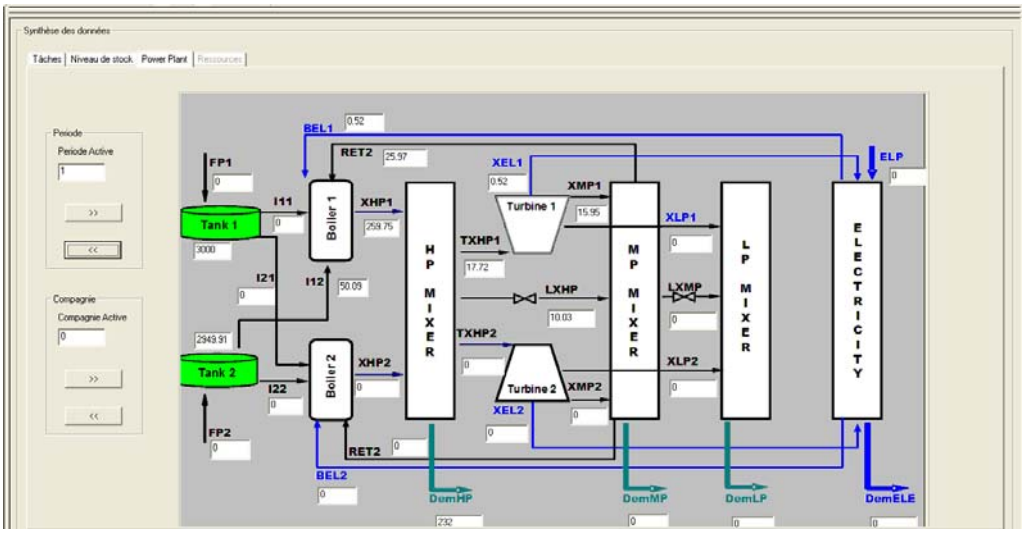

Figure V.28: Information provided by "Power plant" tab

- Utility flows

  This tab provides the details about utility flows, fuel supply to boiler and fuel purchase in CHP plant. This essentially displays the same information as developed in the power plant tab.

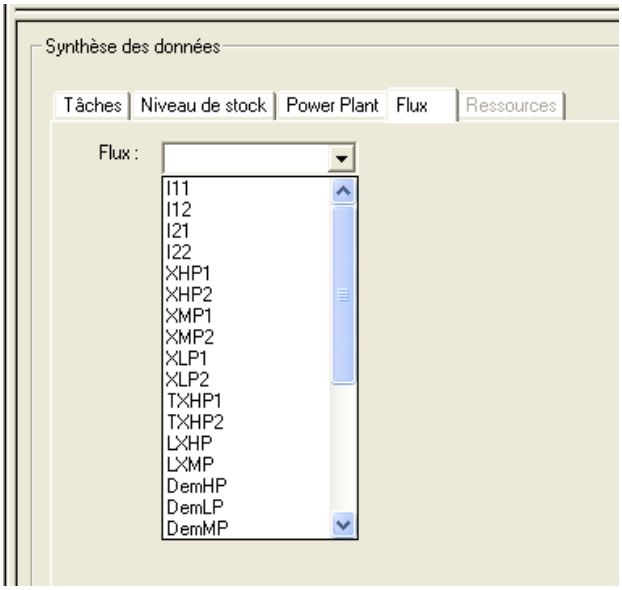

Figure V.29: Information provided by "Utility flows" tab

V.5 RESULTS

This section provides the results that were achieved by applying the sequential and integrated approach on the batch scheduling problem posed by each one of the three production plants. As mentioned above the three main criteria for analysis are overall energy costs, utility flow ratios and convergence history. However, some other interesting results were also achieved which have been briefly discussed.

V.5.1 Overall Energy Cost and Emissions

The first comparison criterion between the two approaches is the energy cost. The figure V.30 shows the energy cost calculations for each production plant at five different load ratios.

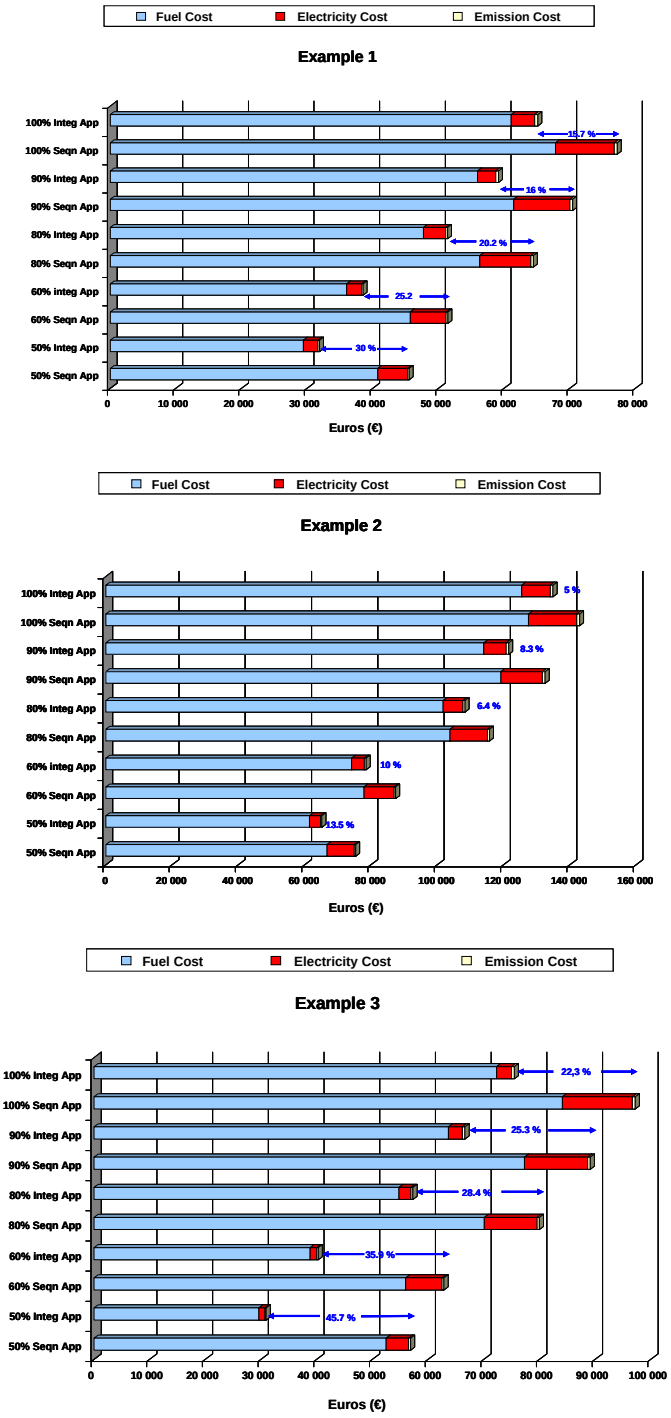

Figure V.30: Overall energy costs

The use of integrated approach leads to significant savings in energy costs for all three examples. However, these cost savings decrease when the production plant operates at or near its maximum (100 %) capacity. This is due to the fact that while operating near the maximum capacity, the production plant has comparatively lesser degree of freedom in shifting and rearranging the tasks. Hence, relatively smaller gains in energy cost are achieved.

The overall energy cost savings are highest in example 3, ranging from 22% to 45%. In comparison, example 2 displays less significant energy cost saving, 13% when production plant operating at 50 % capacity and only 5 % when the production plant operates at 100 % capacity. In example 1, the overall energy cost savings range from 15% to 30%.

In terms of emissions of green house gases (GHG), noteworthy reductions are achieved using the integrated approach (figure V.31). However, similar to energy cost savings the gains in energy emissions reduce as the production plant starts operating near its maximum capacity. The highest gains in terms of GHG is achieved in example 3, ranging from the 12% (when operating at maximum capacity) to 44% (when operating at 50% load ratio). On the other hand, the gains in GHG emissions are a meager for example 2, ranging from 1% to 6%.

The emissions of SO_x show rather abrupt behavior with large gains in some scenarios and losses in other scenarios.

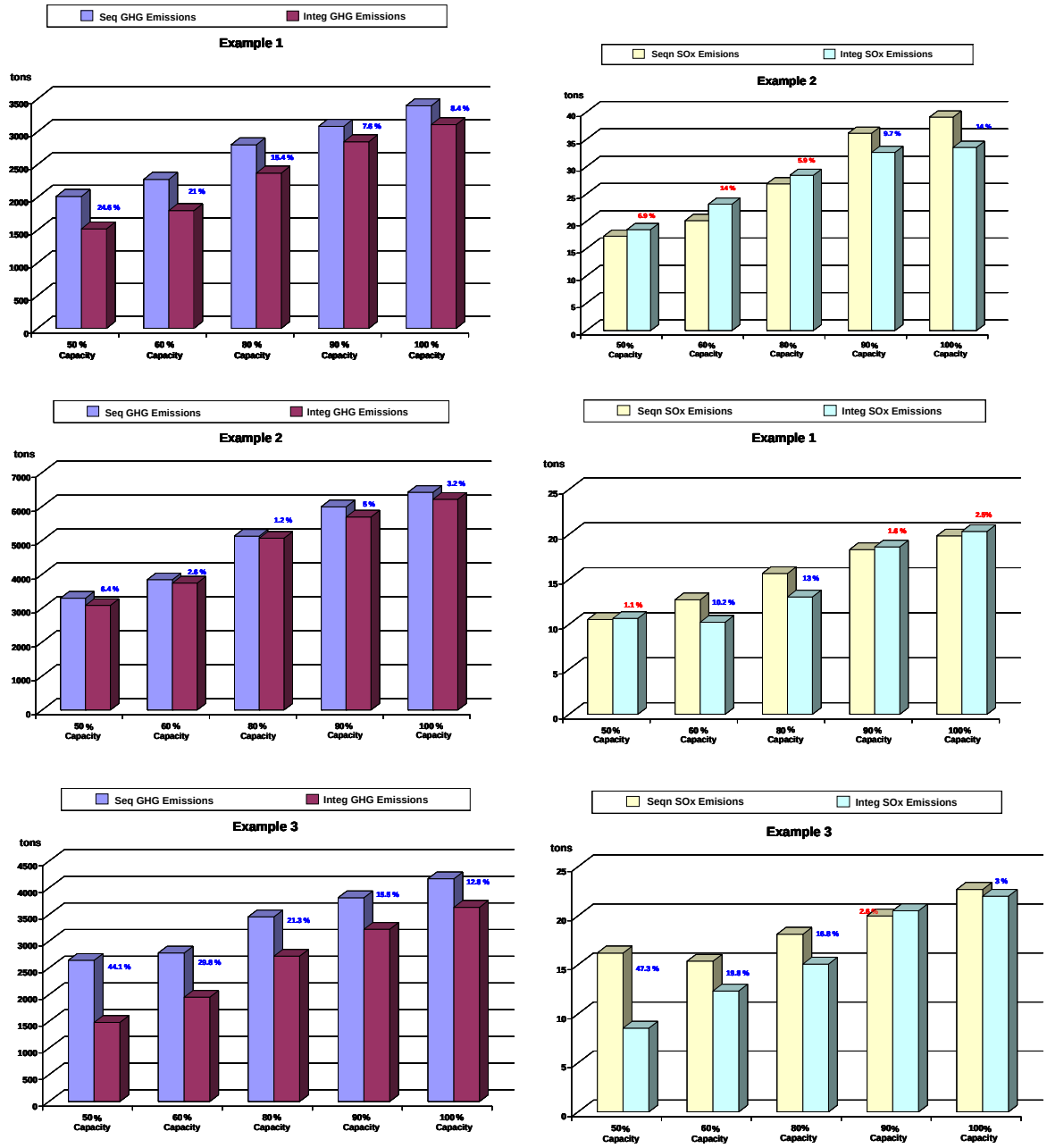

Figure V.31: Overall GHG and SO_x emissions

V.5.2 Utility Flow Ratios

FiguresV.32 and V.33 display the utility flow ratios attained in the CHP plant using the integrated and sequential approaches for all three examples. It is clear from the figures that integrated approach maximizes the use of turbine operation and limits the use of pressure reducing valves leading to more onsite electricity generation and reduced dependence on external electricity supplier.

The average flow ratios provide an interesting point of comparison of the three production plants. The average turbine ratio using sequential approach is only around 65% for example 1 and example 3 but it is a healthy 78% for example 2. This means that the structure of production plant and the production recipe in example 2 is such that there is less potential for overall energy cost gains. However, using the integrated approach the turbine ratio even in example 2 is increased to 94% (an increase of 20.7%). The turbine ratios for example 1 and 3 are increased by using integrated approach to 92% and 98% respectively.

The increased use of turbine ratio subsequently diminishes the need of using pressure relief valves (PRVs). The MP and LP steam requirements of the production plants are met by extracting steam from turbine. For instance in example 3, the sequential approach results in 35% of production plant's steam requirements being met by utilizing HPRV. However, the integrated approach reduces the use of HPRV to only 2% for meeting the MP steam requirements. Similarly the use of LPRV for supply of LP steam is cut from 41% (utilizing sequential approach) to a very negligible amount utilizing integrated approach. The same situation is repeated in case of example 1 and 2 but in spite of using integrated approach 5-8% steam requirement is fulfilled by using PRVs.

Another interesting feature is that despite having turbine ratio above 90% for integrated approach in all three examples the CHP plant is unable to completely meet the electricity requirements of the production plant. Therefore in all examples a certain quantity of electricity is imported from an external source (national grid).

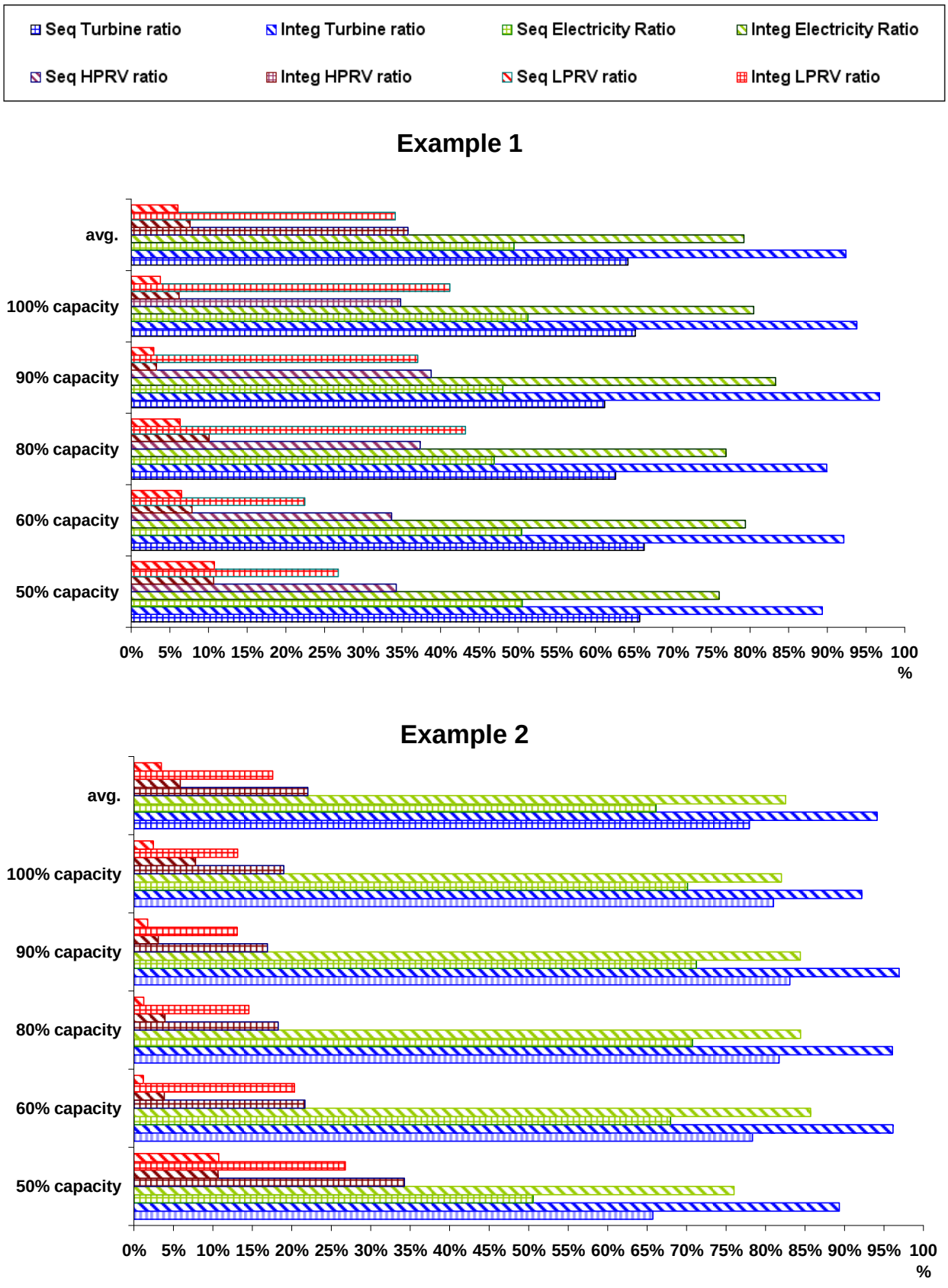

Figure V.32: Flow ratios for example 1 and 2

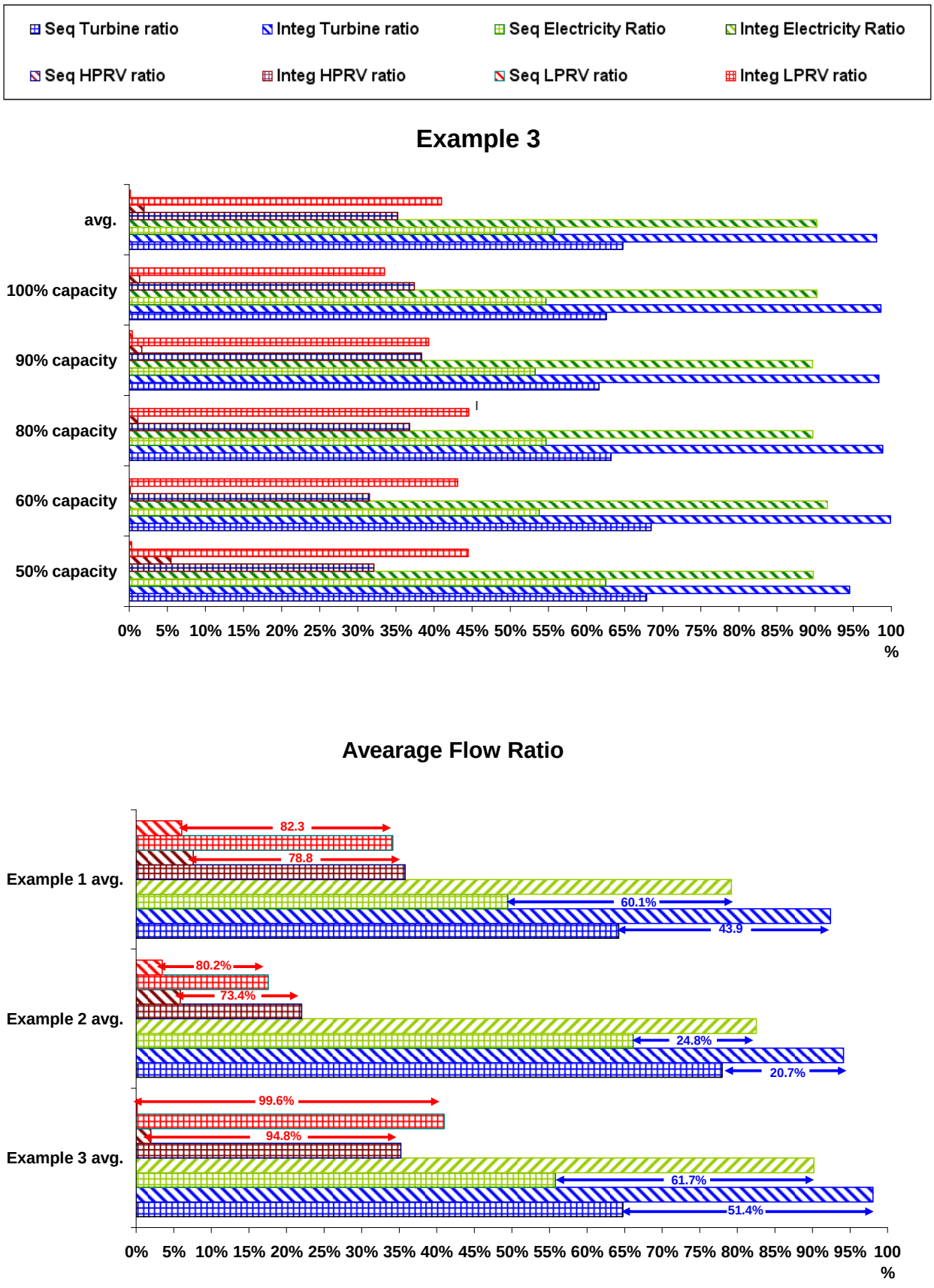

Figure V.33: Flow ratios for example 3 and average flow ratios for all examples

V.5.3 Steam Curves

Steam curves are graphical representations used to show the variation of steam at different pressure levels in the utility system with respect to time. In the sequential approach the utility system is considered as a support function whose role is to simply follow the scheduling of the production plant. This results in haphazard and quick variations in the steam curves. However, in the case of integrated approach the utility system scheduling is also taken into account which results in *smoothing* of the steam curves.

Figure V.34 shows the scenario in which production plant in example 2 operates at 90 % load ratio. The steam curves resulting from using sequential approach shows large variations over the time horizon. During the time horizon of 80 hours the peak requirements of HP steam pass 600 t/h four times. On the other hand, the steam curves attained by using the integrated approach, results in smoother curves with the peak HP steam requirement of 400 t/h.

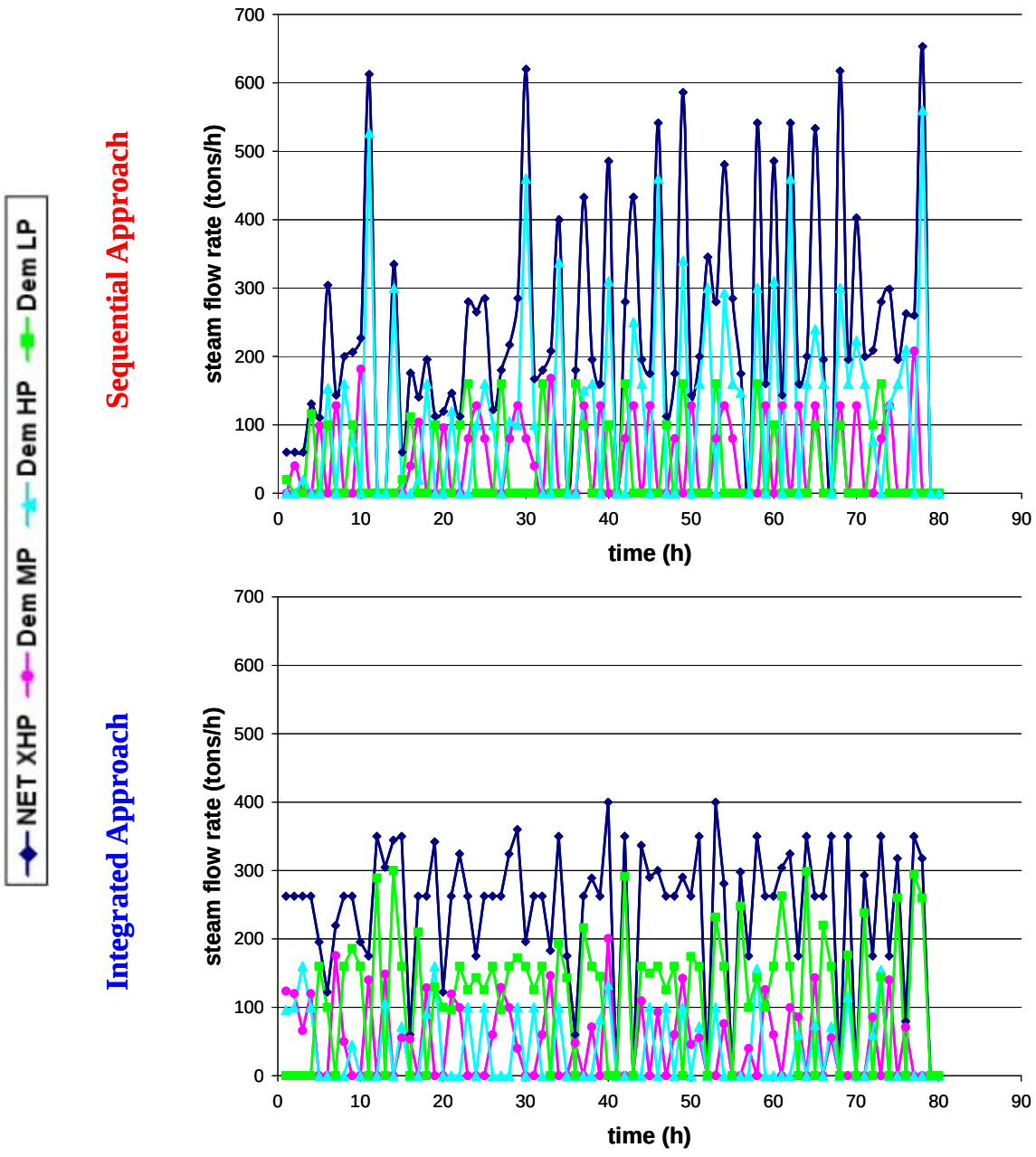

Figure V.34: Steam curves for production plant in example 2 operating at 90% load ratio

V.5.4 Gantt Chart

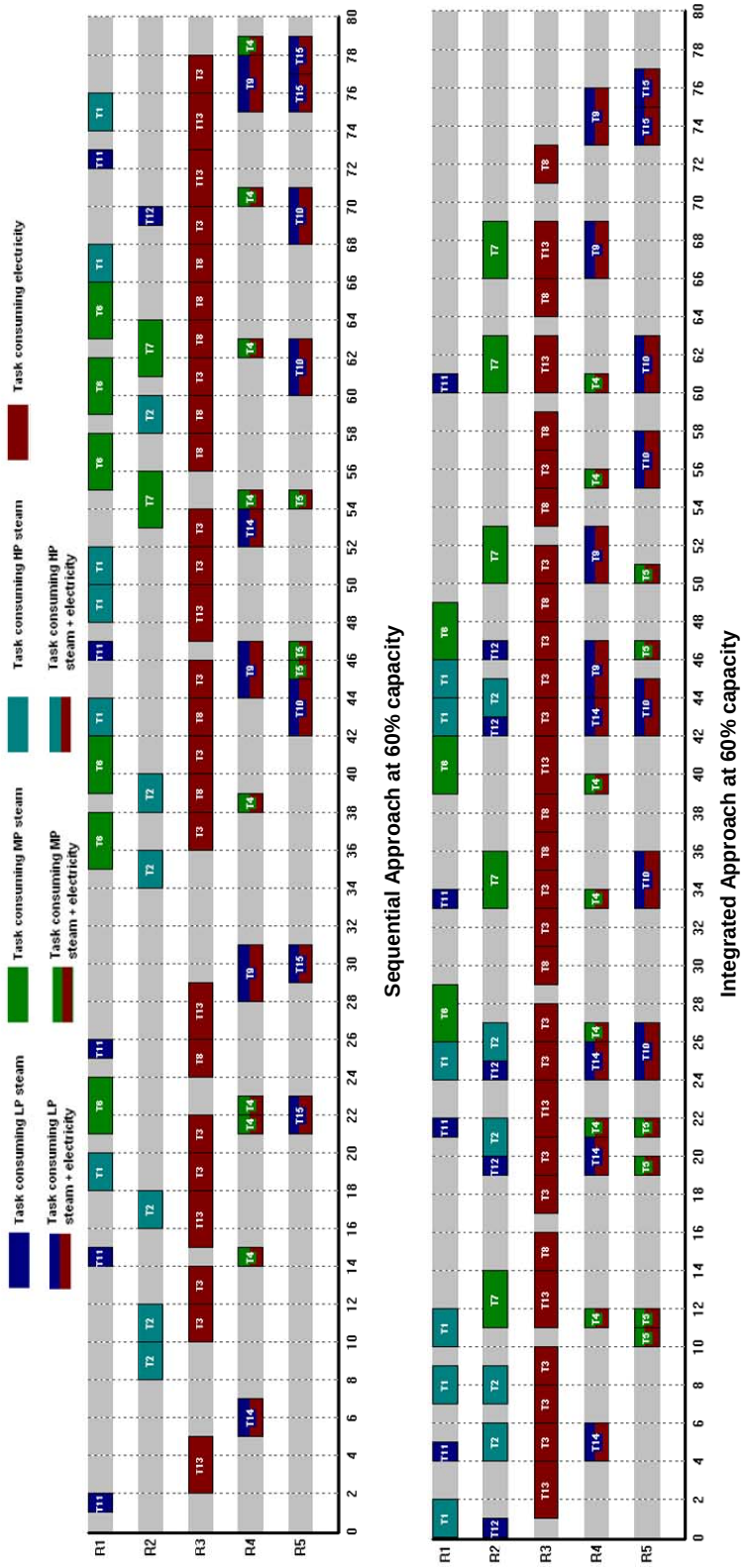

Figure V.35: Task scheduling of production plant operating at 60% capacity

The best comparison between the two approaches can be made by using the Gantt charts which show the occupancy of the processing equipment during the time horizon. A task scheduling Gantt diagram for the production plant in example 1 operating at 60 % capacity illustrates the difference between the sequential and

integrated approaches (figure V.35). The processing tasks in the production plant are color coded according to the type of utility they consume during their execution. A specific color code is reserved for all processing tasks that consume same type of utility. The processing tasks can be divided into two broad categories:

- Task consuming only single type of utility i.e. uniquely HP steam, MP steam, LP steam or electricity. They are represented by a single colored rectangular blocks in the Gantt chart.
- Task consuming simultaneously two types of utilities i.e. steam and electricity. They are represented by multi-colored rectangular blocks in the Gantt chart.

The scheduling of the production plant in sequential approach follows the principle of the minimizing *earliness*, which effectively means curtailing the work in process inventory and material storage. Thus, the utility requirement during a time period is calculated a posteriori. However, in the integrated approach the tasks in production plant are arranged in such a manner that that maximizes the potential of the CHP plant. For example, consider a scenario in which during a specific time duration the processing tasks required two different utilities, for instance, LP steam and electricity. This can be achieved either by generating steam and electricity separately (expensive option) or using cogeneration to simultaneously generate both steam and electricity (cheaper option). Hence, in order to maximize the benefits of CHP plant the production plant should have as many *utility cascades* (requirement of at least two different utilities at same time duration) as possible.

The figure V.35 demonstrates that on one hand scheduling using sequential approach leads to many periods in which only one form of utility is required (e.g. HP steam during periods 8, 9 34 & 35, MP steam during period 23 & 55, etc). On the other hand, the integrated approach rigorously applies the utility cascade (exceptions being period 15, 16, 29, 38, 38, 39, etc). Thus, the use of integrated approach leads to better utilization of cogeneration potential of the CHP plant.

V.5.5 Convergence History

The total iteration time for sequential approach is calculated by combining the iteration times for XPRESS application *BatchPlantAlone.mos* and *CHPAlone.mos*. For comparison with the integrated approach this combined iteration time is compared against the iteration time for *GlobalSystem.mos*. In terms of convergence criteria the sequential approach is superior to the integrated approach. Each of the three examples will be discussed in detail below:

Table V.7: Convergence history of example 1

Load ratio	Approach	Best Solution	Gap (%)	Best solution time	Total iteration time
50%	Sequential	45529.1	0.0	2 min 48.6s	3 min 26.9s
	Integrated	31868.7	6.83	22 min 23.5s	30 min 1s
60%	Sequential	51,436.2	0.0	20 min 26.8s	22 min 26.8s
	Integrated	38,182.3	7,15	30 min 4s	30 min 7.2s
80%	Sequential	64,434.9	0.0	5 min55.9s	5 min 55.9s
	Integrated	51,388.4	7.57	22 min 8.9s	30 min 4.3s
90%	Sequential	70,433.3	0.89	25 min 8.0s	32 min 16.4s
	Integrated	59,129.8	9.60	20 min 47.3s	30 min 5.2s
100%	Sequential	77,220	0.0	30 min 30.5s	30 min 30.5s
	Integrated	65,116.9	8.75	8 hr 17 min 22s	8 hr 32 min 57s

The table V.7 shows the convergence of example 1. The sequential approach is not only much faster but it almost contains no convergence gap, the only exception being the production plant operating at 90 % capacity where the gap was of less than 1%. On the other hand the average convergence gap in integrated approach comes out to be 7.98 %. This might appear as a drawback but it is important to note that despite this convergence gap that the integrated approach leads to energy cost savings between 15 – 30 % and GHG emission reductions between 7 – 24 %.

Table V.8: Convergence history of example 2

Load ratio	Approach	Best Solution	Gap (%)	Best solution time	Total iteration time
50%	Sequential	75,374.9	0.0	18.7s	42.5s
	Integrated	65,194.7	5.79	14 min 4.2s	30 min 7.1s
60%	Sequential	87,428.2	0.0	38 min 22.2s	49 min 12.8s
	Integrated	78,004.6	6.0	27 min 5.1s	30 min 2.8s
80%	Sequential	115,758	1.45	25 min 12.1s	1 hr min 1.9s
	Integrated	108,399	8.7	4 min 42.6s	30 min 0.8s
90%	Sequential	132,550	2.51	55 min 43s	1 hr 3min 32.7s
	Integrated	121,554	8.02	9 min 40.5s	8 hr 05 min 55s
100%	Sequential	142,066	1.89	4 hr 37 min 49s	2 hr 12 min
	Integrated	134,941	8.36	15 h 14min 35s	24 hr

The convergence history (table V.8) shows that convergence of example 2 is considerably slower than that of example 1. Even the sequential approach takes more time to converge and in certain cases complete convergence is not achieved. The average gap in sequential approach simulations comes out to be 1.8 % while in integrated approach it is 7.4 %. For the scenarios in which production plant operated at 80, 90 and 100 % capacity the gap is greater than 8 %. In case of 100 % capacity the convergence is extremely slow and no solution is achieved during the first 30 minutes. It can be inferred that if the simulations are allowed to run for longer duration then this gap might reduce and subsequently higher gain in overall energy cost may be achieved.

Table V.9: Convergence history for example 3

Load ratio	Approach	Best Solution	Gap (%)	Best solution time	Total iteration time
50%	Sequential	56,844.8	1.93	8 min 1.4s	30 min 43s
	Integrated	30,885.3	6.32	33 min 1.4s	35 min 2s
60%	Sequential	62,822.9	0.0	3 min 11.6	3min 26.1s
	Integrated	40,240.9	7.88	4min 38.6s	30 min 16.8s
80%	Sequential	70,967.6	0.0	12 min 24.8s	14 min 16.6s
	Integrated	57,248.4	6.78	21 min 4.6s	30 min 37.6s
90%	Sequential	89,104.9	0.0	23 min 17.5s	32 min 09.7s
	Integrated	66,597.7	7.38	24 min 48.8s	30 min 2s
100%	Sequential	97,167.8	0.84	16 min 22.8s	37min 31.3s
	Integrated	75,463.5	6.12	1 hr 7min 50s	4 hr 35 min

The convergence in example 3 (table V.9) is faster than example 2 but a little slower than that in example 1. Complete convergence is achieved in all cases of sequential approach while in integrated approach the convergence gap on average is 6 %.

From the above discussion it can be inferred that in terms of convergence time and the gap the sequential approach is superior to the integrated approach. However, in most cases the optimization solutions found in the first few minutes by the integrated approach (despite having large integrality gap) are already superior to the results found by sequential approach with no integrality gap. For example the following figure V.36 presents the evolution of iteration for example 3 at 90% load ratio.

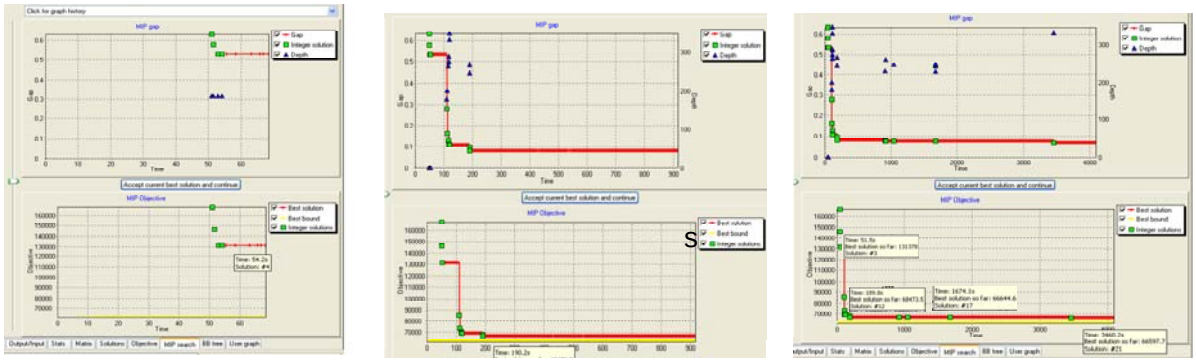

(a) Iteration time 1min (b) Iteration time 15 min (c) Iteration time 66 min

Figure V.36: Evolution of iteration for example 3

The optimal solution found by the sequential approach after around 23 minutes of iteration and 0% gap is € 89,104.9. However, the 12th solution found by integrated approach within the three 3 minutes and 10s is € 66,644.6, which is 25% less than achieved by sequential approach.

V.5.6 Decision Consistency

The use of ERTN based integrated approach leads to reduced energy cost as well as decreased emissions of harmful gases. However another advantage of the integrated approach is the increase in production productivity. To explain this in detail we recall the example 1.

Consider a utility consumption matrix ($Cop_{v,k}$) and the corresponding energy costs in table V.10 and table V.11 respectively. The table V.11 shows that integrated approach not only results in reduction in energy costs but it also leads to feasible solution for all five scenarios. On the other hand the sequential approach gives infeasible solutions in scenarios where production plant operates at 90 % and 100 % capacity.

Table V.10: Utility Consumption Matrix ($Cop_{v,k}$)

Tasks	1	2	3	4	5	6	7	8	9	10	11	12	13	14	15
LP steam	0	0	0	0	0	0	0	0	4	4	3	3	0	2	2
MP Steam	0	0	0	4	4	3	3	0	0	0	0	0	0	0	0
HP Steam	6	6	0	0	0	0	0	0	0	0	0	0	0	0	0
Electricity	0	0	0.2	0.1	0.1	0	0	0.2	0.1	0.1	0	0	0.2	0.1	0.1

Table V.11: Overall energy costs

Capacity	Approach	Total Cost (€)	Fuel Cost (€)	Electricity Cost (€)	SO_x Cost (€)	GHG Emissions (tons)	SO_x Emissions (tons)
100 %	Sequential	Not feasible	Not feasible	not feasible	not feasible	not feasible	not feasible
	Integrated	128,068.7	116,457.0	10,898.0	713.7	5,763.0	31.0
90 %	Sequential	Not feasible	not feasible	not feasible	not feasible	not feasible	not feasible
	Integrated	116,522.6	104,958.0	10,916.8	647.8	5,198.1	28.2
80 %	Sequential	116,210.5	96,450.5	19,095.9	664.1	4,839.4	28.9
	Integrated	102,416.5	91,850.7	9,998.4	567.4	4,549.4	24.7
60 %	Sequential	89,553.0	75,357.7	13,656.1	539.2	3,799.5	23.4
	Integrated	76,707.2	69,291.5	6,971.9	443.8	3,446.4	19.3
50 %	Sequential	75,759.0	63,206.9	12,136.3	415.8	3,153.8	18.1
	Integrated	63,222.5	57,356.3	5,525.2	341.0	2,828.8	14.8

For the scenario in which production plant operates at 90 % capacity figures V.37 & figure V.38 presents the task scheduling Gantt diagrams and operational planning of utility system (depicted by steam load curves). The sequential approach calculates task scheduling without considering operational constraints of the CHP plant. As a result not only there are huge variations in the steam load curves but during period t = 15 the steam demands of the production plant exceed the generation capacity of the CHP plant. This resulted in sequential approach rendering infeasible solution. On the other hand in the integrated approach the tasks are shifted and rearranged in such a manner that the utility requirements never exceed the CHP plant capacity. From this an inference can be drawn that the integrated approach enables an industrial Process equipment to achieve higher productivity as it can handle scheduling regimes that would be unattainable using the sequential approach.

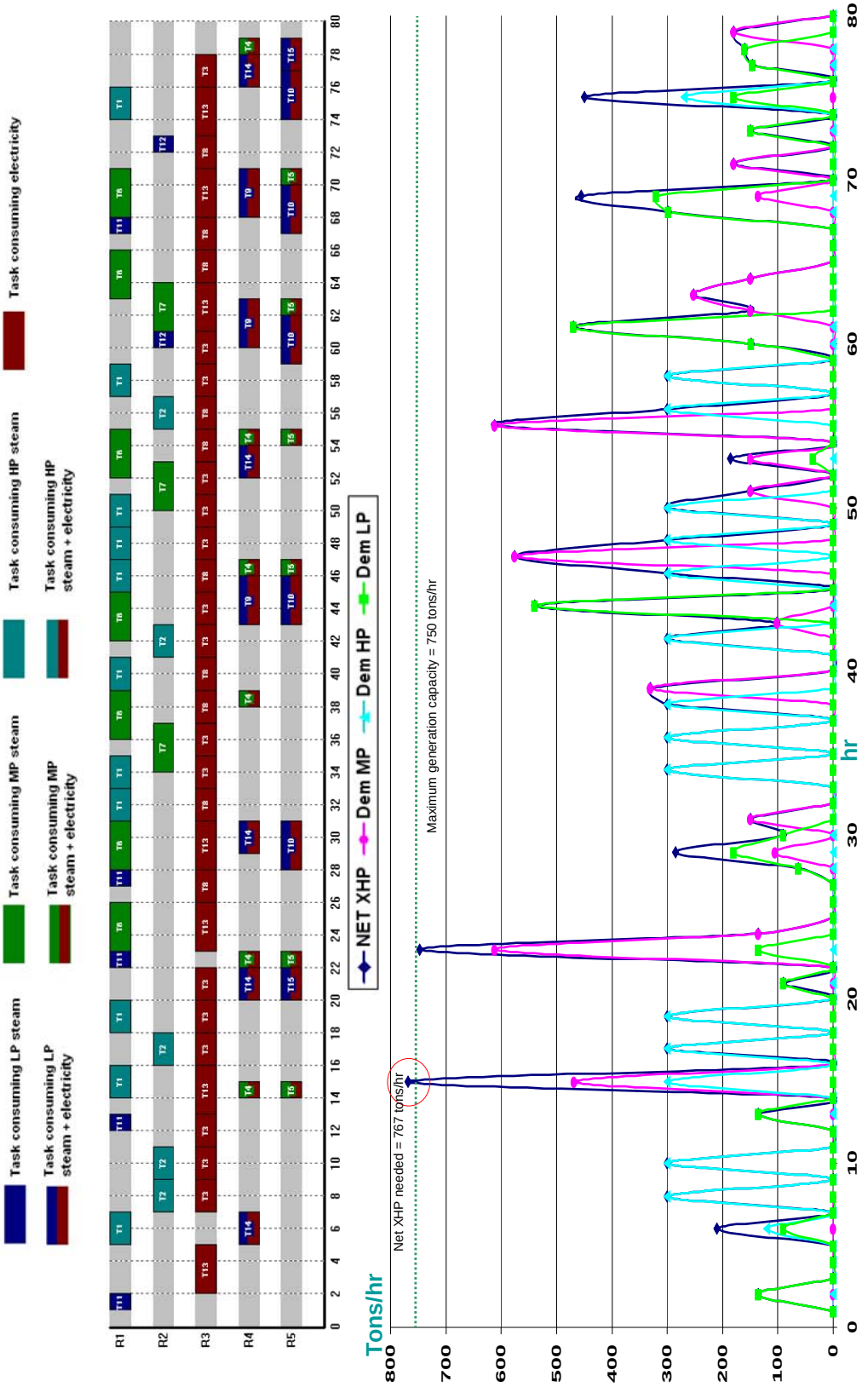

Figure V.37: Sequential approach production plant Gantt diagram and steam curves of utility system

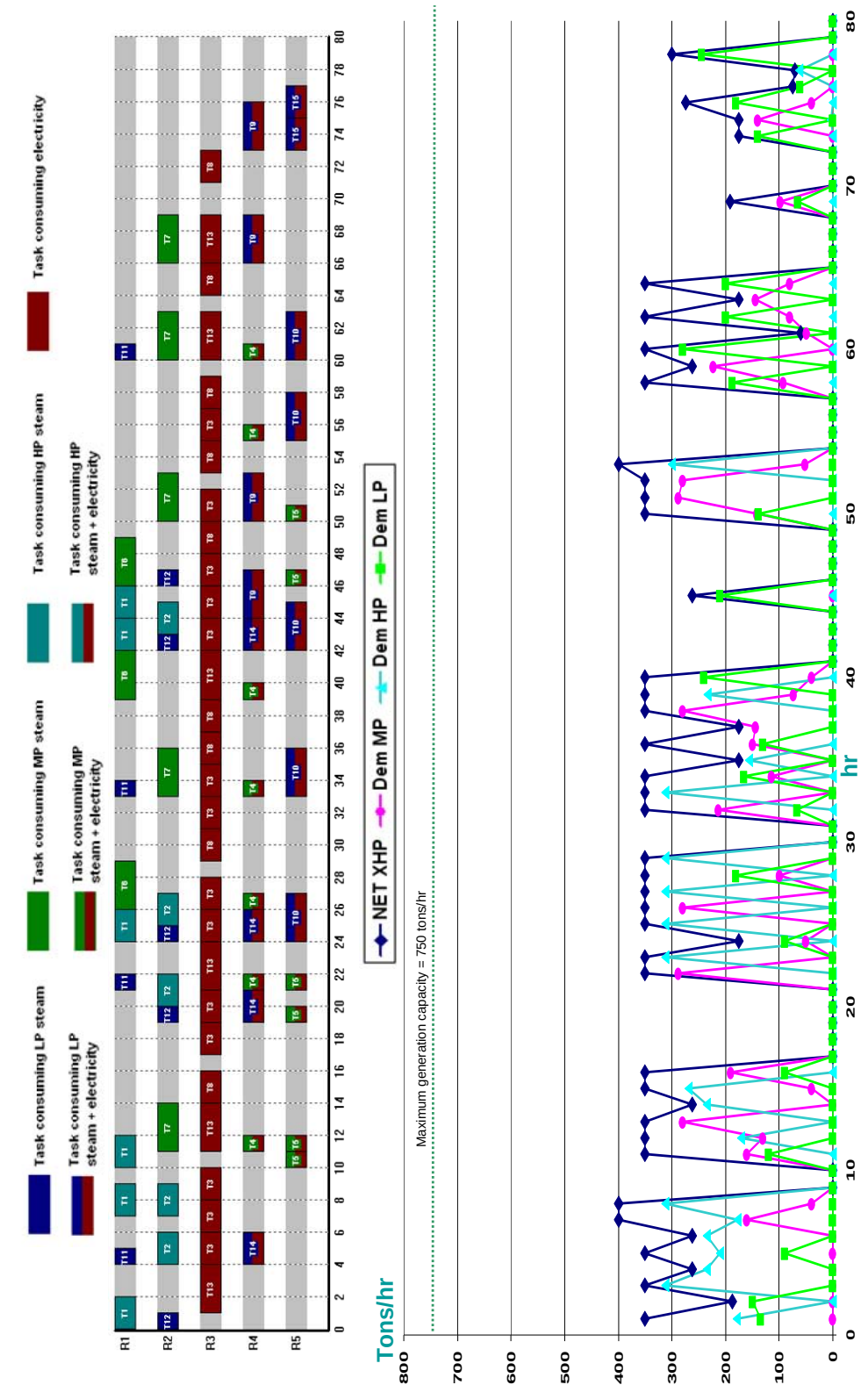

Figure V.38: Integrated approach production plant Gantt diagram and steam curves of utility system

V.6 CONCLUSION

On the basis of the above discussion it can be concluded that integrated approach leads to significant energy cost savings and emission reduction advantages. The extent of these gains is somewhat dependent on the load ratios and plant topologies but the use of integrated approach always results in more advantageous operational regimes. These benefits are attained by optimizing the use of cogeneration and more efficient exploitation of utility resources (i.e. synchronization of tasks consuming utilities and tasks generating utilities).

The use of integrated approach leads to another key development in terms of smoothing of steam load curves. As shown in figure V.34 the smoothing of steam load curve results in reduction of peak load demands from the site utility system, which has the following advantages:

- *Control Aspect*: In contrast to the sequential approach there is a reduced fluctuation in the operating points of the steam load curves. This decreases the operational complexity and allows the utility system management greater control over the plant operations.
- *Design Aspect*: As the use of integrated approach results in reduced peak load demands therefore the management can choose smaller sized utility systems at the time of conception of industrial units. This will automatically result in lower investment cost as same plant productivity can be achieved using cheaper smaller scaled cogeneration equipment rather than buying expensive large scale equipment.
- *Operational Aspect*: The integrated approach enables an industrial unit to achieve higher productivity levels as it can handle scheduling regimes that would be unattainable using the sequential approach. This higher productivity level not only means that the production plant can produce greater number of finished products but it also leads to increased *decision coherency* within the industrial unit.

  As a result of using the sequential approach, quite often in the industrial environment, there arises a conflict when the utility demands from the production plant are so high that they can not be met by the utility system. In this case the management of utility system communicates to management of production plant the need to change the production schedule. Hence the whole three step process of developing the production plant scheduling, evaluation of utility requirements and scheduling of site utility system needs to be carried out once again. The use of integrated approach eliminates this conflict between the industrial unit components and the site utility system is always in condition of meeting the utility demands set by the production schedule.

Finally, for this study, the emission penalty costs were significantly underplayed and constituted less than 1% of overall costs. This correlates with the current economic situation where no monetary punishments are associated with harmful gas emissions. However, cost objective function (equation [Eq. V-8]) can be used to develop scenarios in which emission costs have a greater impact. Table V.12 shows result of an additional simulation which was based on emission externality costs of El-Kordy *et* al. [2002].

Table V.12: Incorporating full emission externality cost for example 3 functioning at 60% capacity

Emission externality cost €/ton		Total Cost (€)	Fuel Cost (€)	Electricity Cost (€)	GHG Cost (€)	SO_x Cost (€)	GHG Emissions (tons)	SO_x Emissions (tons)
GHG	**SO_x**							
115.65	3640.54	293,795	36,015.5	14,935.1	206,834	36,011	1788.45	9.89
0	23	40,40.9	38,776.3	1,181.21	0	283,4	1968.52	12.32

The emission costs become a dominant factor (83% of overall costs). Even though fuel cost decrease by 7% but electricity cost see a massive increase. This is expected as rather than minimizing energy cost associated with fuel and electricity purchase all the effort is spent in reducing the emissions of harmful gases. As a result GHG emissions are reduced by 9% while those of SO_x are reduced by almost 20%.

The results also demonstrate that imposing high carbon tax and other emission penalty cost would nullify the use of CHP technology. Faced with steep emission penalties the industrial units would prefer to buy electricity from external source rather than producing it through cogeneration. This is an extreme example which was presented just to demonstrate impact of emission externalities. From this it can be concluded that incorporating emission penalty cost have huge influence on the problem parameters and their numerical values should be selected carefully.

In the end, it can be generalized that significant advantages are achievable by coupling scheduling of the production plant and site utility system in a universal scheduling model. Hence, rather than using the traditional sequential approach industrial units should look towards adopting integrated approach. In this context the ERTN framework can play an important role as it inherently performs the combined scheduling of the production plant and site utility system.

GENERAL CONCLUSION AND RECOMMENDATIONS

The energy issue is of crucial problem and will become increasingly important in the coming decades. Higher energy costs and progressively stringent environmental laws are forcing the industrial sector to streamline their energy consumption. CHP based onsite utility systems can make useful contribution in this regard especially in case of industrial units who have high energy needs. However, to maximize the potential of the CHP based onsite utility systems, it is imperative to have better management of utilities. Contrary to the traditional reasoning of placing the emphasis solely on production (manufacturing unit) and treating the utility system as a subsidiary unit, it is vital to give equal importance to both units.

The significance of this dissertation lies in its contribution both in practical and theoretical terms. In theoretical terms, the contribution of this study is

- the literature review which helps to identify the potential tools and methodologies, which are available today for improving the energy efficiency of the industrial processes. The analysis of the literature highlighted the importance of assimilating different functions of a "total processing system/an industrial unit". This lead to initiative of developing an integrated approach for joint scheduling of a production plant and its associate site utility.
- to develop a new modeling scheduling framework called ERTN (Extended Resource Task Network). The ERTN framework is an extension of the RTN framework which makes clear distinction among different types of resources by introducing new semantic elements. These semantic elements bring in to play various mathematical constraints that remove shortcomings associated with heterogeneity of operational modes and the ability of processing operations to produce material in unknown proportions of batchsize. The point of strength of the ERTN framework lies in the direct relationship that it creates between the graphical representation and the mathematical formulation based on MILP. Each entity set (combination of nodes and arcs) in ERTN framework corresponds directly to a set of mathematical constraints. This makes the framework ***generic*** allowing easy conversion of the graphical representation into the mathematical formulation.

In practical terms, the contribution of this study is:

- to demonstrate the advantages achieved by redefining traditional the decision making procedures in the batch production plant. The use of integrated approach:
    - leads to significant reduction in primary energy consumption, increased use of cogeneration in the industrial site, smoothing of steam curves, increased in productivity and reduced emission of harmful gases. It is important to point out that these benefits were achieved in all production plants examined but product recipe and plant topology did have an affect on the overall results. Hence, the potential benefits will vary from one production plant to another but the integrated approach will always be more beneficial then sequential approach.
    - makes the decision making more coherent in the industrial unit whose different business functions (production plant, site utility system, general management) are given equal attention. However, implementation of this approach would require increased emphasis cross functional communication and reliance on computer aided tools. The integrated approach would be difficult to implement in the industrial units with rigid centralized organizational structure.
- to propose the first prototype of a software application that can be used for analyzing the scheduling results achieved for batch production plant and the site utility system. The user friendly graphical

interface provides the management an indispensible tool for not only monitoring the operational regimes but for identifying the areas of potential improvement.

However, the work presented in this dissertation is only the first step towards a methodology to promote a more rational use of energy in industrial units. The following recommendations were identified during and after the study, which need to be investigated in greater detail. These recommendations are directed towards the improvements in problem formulation (developing a better model), the software, the applications, the solving strategies and the future extensions.

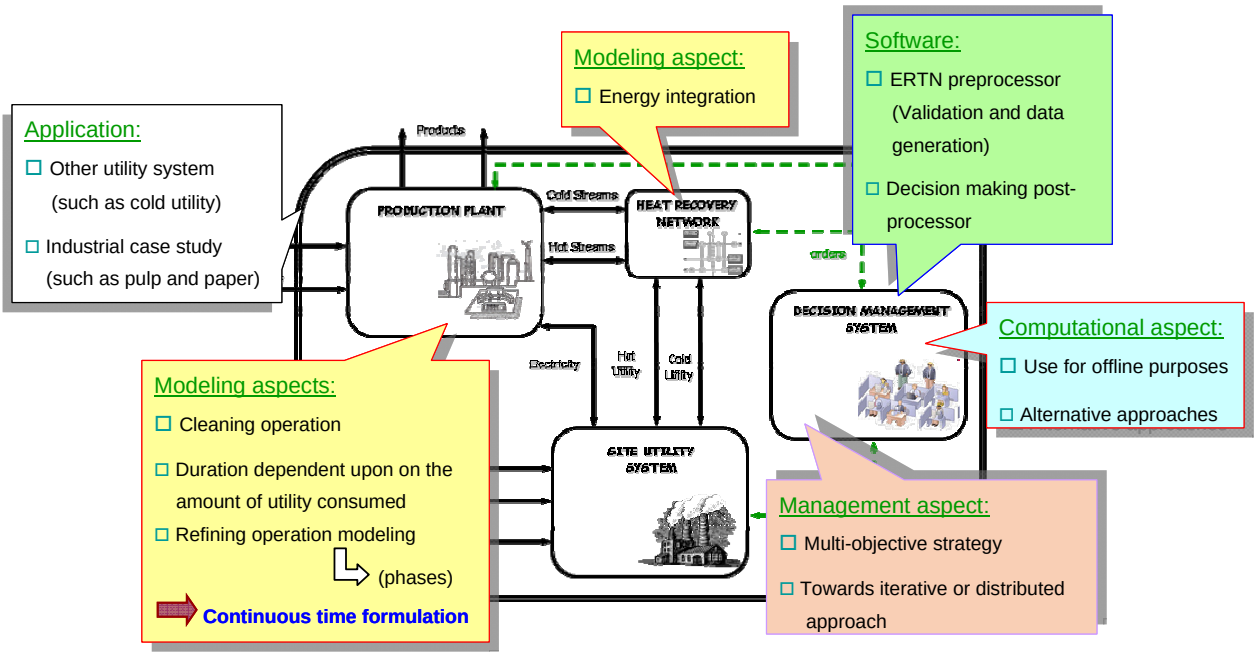

Figure GCR.1: Future extension of ERTN framework

- Starting with the potential improvements in the model. A drawback of the discrete time formulation, which is used in this study, is that time durations are always in multiples of the time periods. This simplification in certain cases can lead undue approximations in allocation and task duration constraints, ultimately leading to erroneous results. This deficiency can be overcome by using a continuous time formulation, which may be difficult to model but can lead to more accurate representation of "time". The continuous time formulations would allow for incorporating in a more rigorous manner the process operations associated with cleaning of processing equipment. The cleaning processing operations are not only a common feature in multi-product batch plants but they consume significant quantities of utilities.
  Another feature that can be formulated more accurately using continuous time formulation are processing operations whose duration depends on the amount of utility consumed. These operations are prevalent in process engineering (reaction, preheating, etc) and they can slow down or accelerate the rate of process operation to match the utility supply profiles.
  Finally, in the current model, whenever an operation requires multiple utilities, they are supposed to be consumed throughout the duration of the process operation. However, there are cases where the utilities are consumed only during certain phases and not over the complete duration of process operations. Hence, in order to have a more accurate localization of consumption of utility in a processing operation, it will be interesting to model operations at the 'phase level' (terminology presented by ISA SP88) rather than modeling them over whole process operation duration.

- In regards to a computer software, as mentioned above, the ERTN framework allows one on one relationship between the graphical presentation and the mathematical formulation. Hence, it is easy to expand this framework into computer software. The software would consist of three modules:
    - A pre-processor, called '*ERTN generator*' that would enable the user to define his problem by drawing the ERTN representation of the system and by defining all the associated numerical values. Then, on the basis of the rules enounced in the chapter IV, the pre-processor would check the model. If correct, this information would then be fed to an optimization solver in form of a computer code,
    - The optimization solver (e.g. XPRESS) would find the optimal solution and generate the output in form of data file.
    - Finally, this data file would then be read by the post-processor, called '*GANTTChart*' which would present the scheduling results in a user friendly graphical interface. The first attempt towards developing the post-processor has been started in this study, which has resulted in development of scheduling Gantt chart and other important scheduling results (e.g. batchsizes, material storages, turbine ratio, etc) in a simplified graphical format.

- Regarding the possible application of the integrated approach, it must be précised that that at present the methodology has only been applied to academic examples. The integrated approach has demonstrated some interesting advantages over its counterpart sequential approach. However, the effectiveness of the integrated approach can only be established after being applied to real industrial problem. In the short term this objective can be achieved by collaborating with an industrial enterprise. The pulp and paper industry appear to be most appropriate collaborators as their process is not only very energy intensive but their process involves discontinuous or semi-continuous operations.
  For this dissertation the emphasis has been placed on the utilities commonly found in the CHP plant. However, it seems appropriate to include other types of utilities such as "cold utilities" which are particularly important in the food industry. The special feature of the cold utility is that it may eventually be stored, thereby providing an additional flexibility to the production scheduling. Similarly, in this study it has been assumed that the "hot utilities" (HP, MP and LP steam) can not be stored. To incorporate the storage of "hot utilities", the initial and maximum capacity of the respective material resources need to be changed from zero to a finite number. Hence, the ERTN framework is not limited and it can easily incorporate different type of utilities (hot and cold utility) and their storage.

- The examples discussed in this dissertation showed significant computation time may be required to resolve the integrated model. Even though this is a very restrictive constraint but it is not fatal because:
    - firstly, a "good" solution (that is to say, better than the sequential approach) may often be obtained with a reduced computational effort
    - secondly, this tool is used offline which can allow a response time of several hours.

  However, this time problem resolution should not be overlooked, especially if the integrated approach is going to be applied to an industrial size problem or if it is integrated into a tool for decision support for which the time response must be much shorter (in order of minutes).
  In this context, several alternatives can be envisaged. First, meta-heuristics (genetic algorithm, neighborhood methods) could be used to control the combinatorial aspect of the problem. Another alternative is to use the solution provided by the sequential approach (usually obtained within a shorter

time) as the first solution of the integrated approach. This will reduce the research space for the solver and will reduce the iteration time for the integrated approach.

- In terms of management of the industrial unit, the multi-objective function used in this study is composed of energy costs (fuel and electricity) and penalty costs for emissions of harmful gases. As a result, all the emphasis is placed on adapting the scheduling of the production plant to meet the most cost efficient operational planning of the site utility system. However, in the real industrial environment, the reliability of the production process is of overriding importance and normally a *reserve margin* is set in case of a delay or breakdown in the utility system. This reserve margin could be incorporated using a *weighted sum* of inventory levels (of raw materials, intermediate and finished products) and operational costs (fuel, electricity, penalty costs, etc.) of the utility system as the objective function. Moreover, by varying the weights of the coefficients, a number of schedules can be developed, which include all the foreseeable scenarios such as the breakdown of machinery in the utility system.
  By minimizing only the energy cost in the integrated approach, this dissertation has ascertained the maximum attainable cost saving in energy costs. However, it is important to clarify that in the existing management environment, prevailing in the industrial sector that places the focus solely on the production plant, implementation of the integrated approach might be a bridge to far. Therefore for the time being some other alternatives must also be considered. One possible alternative for the Decision Management System of industrial unit is to propose various alternative solutions using multi-criteria objective function. This would present the management of an industrial unit with multiple solutions (based on the chosen criteria) and allow them to select the most beneficial solution. Another possible alternative could be a hybrid iterative or distributed approach which would combine salient features of both the sequential and integrated approaches.
  In the mean time, to overcome the sub-functional view the management of production plant and site utility system should be encouraged to have more interaction and adopt a more site wide view rather than myopically concentrating on their respective units.

- Finally on extensions of the methodology, two possible avenues stand out:
  - The first concerns the introduction of energy integration into the decision process. The Chapter II quoted some specific studies which have worked on integration of energy constraints directly into the production plant scheduling problem. In order, to attain further improve energy efficiency and reduce costs it is it is essential to consider integrating all three components of the industrial unit i.e., production plant, site utility system and heat exchanger network. As we demonstrated in Chapter IV, the ERTN framework is not limited to the scheduling problems involving a site utility system. This framework could equally be applied to incorporate energy integration among different processing equipments within the production plant.
  - The second is a more long-term objective which associates with the drive for creation of "eco-industrial park" [Gibbs & Deutz, 2007]. Nowadays, there is a greater willingness among companies to come together and form networks that allow for more efficient use of utilities. A real life example of this concept is an "industrial symbiosis" project conducted in Denmark, which brought together five major companies located in the same region. The companies developed a network which allowed for utility exchanges, and thereby

significantly reducing the overall energy for each participating companies. However, unfortunately these types of networks are exceptions and only handful successful networks have been reported in the literature. The difficulty in developing such type of networks is caused not only by lack of tools and methodologies for their design but also by the increased competitive environment which means that these collaborating companies might well be each others competitors. In such environment, the ERTN framework, included for example in a multi-agent-based decision tool, could play the role of facilitator among various collaborators.

In the end, it can be concluded that although research for alternative source of energy is more in vogue, looking for ways of improving energy efficiency of industrial processes remains an important theme of research. These "conventional research" can act as the short term solution to the energy consumption problem and allow the more emerging technologies to mature. And even when the fossil fuel resources would finally run out, replaced with the new ways of generating energy there will always be potential for improving energy efficiency. Moreover, the better management practices adopted today will remain pertinent in the future as well.

RÉSUMÉ DE LA THÈSE EN FRANÇAIS (THESIS SUMMARY IN FRENCH)

1. CONTEXTE GENERAL DE L'ETUDE

Dans un contexte de développement durable, la question énergétique constitue un des problèmes majeurs des décennies à venir (raréfaction de certaines ressources, augmentation globale de la demande, réduction des émissions de CO2, etc.). Une des conclusions du groupe de travail "*Lutter contre les changements climatiques et maîtriser l'énergie*" réuni à l'occasion du récent **Grenelle de l'environnement** est qu' "*au delà des actions spécifiques visant à améliorer l'efficacité énergétique des bâtiments et à contenir la consommation du secteur des transports, il existe un gisement d'économies dans les autres secteurs qui représente 43% de la consommation finale d'énergie (…).* En ce qui concerne l'industrie, qui compte pour 21% de la consommation d'énergie finale et 20% des émissions de gaz à effet de serre, le groupe de travail reconnaît *"les efforts significatifs déjà engagés par les acteurs du secteur mais estime qu'une démarche supplémentaire de progrès est indispensable*". En conséquence, soumises à des coûts plus élevés de l'énergie et à des législations environnementales plus contraignantes, les entreprises doivent rationaliser leur consommation. Dans l'industrie de procèdes en particulier, un axe d'amélioration potentiel réside dans la gestion et le mode de fabrication des utilités. En effet, le groupe de travail précise dans ce cadre qu'"*environ un tiers de la consommation énergétique des entreprises industrielles (soit 11Mtep en énergie finale) provient des procédés dits "utilitaires" (production de vapeur, d'air chaud, chauffages, électricité,…). Des marges importantes d'amélioration de l'efficacité de ces procédés existent. Sans rupture technologique, la diffusion et la mise en œuvre de meilleures pratiques peut permettre d'économiser jusqu'à 2 Mtep".* En d'autres termes, un des leviers évoqués par ce groupe de travail pour diminuer la consommation énergétique et les émissions de gaz à effet de serre est *"la mise en place de méthodes plus performantes pour l'exploitation des process utilitaires"* au sein des unités de production.

Toutefois, s'il apparaît essentiel pour les entreprises de réduire de manière significative leur consommation énergétique et leur émission des gaz à effet de serre, ces dernières sont aussi tenues de conserver des solutions compatibles avec des exigences de productivité et de compétitivité de leur système de production. Or, bien qu'il s'agisse d'un problème crucial, le manque de méthodologies et d'outils d'aide à la conception et à la gestion de ces systèmes constitue aujourd'hui un frein à la mise en place de ce type de pratique.

Dans ce cadre, notre étude s'intéresse plus particulièrement aux industries chimiques qui disposent sur leur site de production de leur propre centrale de production d'utilités. Le système étudié est composé de deux unités: une unité de fabrication qui consomme des utilités pour produire le produit fini et une centrale de cogénération pour la production d'utilités. En effet, la mise en place de centrale de cogénération de ces utilités décentralisées sur les sites consommateurs est une première réponse dans cette direction. En effet, une exploitation efficace de ces centrales peut permettre d'améliorer globalement le rendement énergétique (taux de conversion "énergie primaire/énergie utile").

L'objectif de cette étude vise à démontrer que le rendement énergétique d'un système combinant production de biens et production des utilités peut être amélioré par une meilleure coordination entre ces deux composants. Dans le cas des procédés considérés dans ces travaux, il s'agit de développer des modèles et des méthodes permettant d'optimiser simultanément les problèmes de production et de planification des centrales de production d'utilités. Ces travaux s'intègrent dans une démarche émergente en Génie des Procédés dite "d'intégration des procédés" c'est-à-dire l'intégration optimale des différentes unités composant un procédé [Durana et al., 2005],[Adonyi et al. 2003],[Zhang et Hua, 2007].

2. VERS UNE UTILISATION PLUS RATIONNELLE DE L'ENERGIE

Actuellement la plupart des activités de recherche vise à trouver des sources alternatives d'énergie, des sources renouvelables et moins polluantes. Toutefois, il ne peut s'agir là que de solutions à long terme. En effet, les dernières projections [EIA, 2006] montrent que les combustibles fossiles demeureront encore la principale source d'énergie dans un avenir proche. Parallèlement à la recherche de sources d'énergie alternatives, l'amélioration de l'efficacité énergétique est donc présentée comme la solution court terme la plus opportune. Dans ce contexte, des initiatives industrielles mais aussi des programmes de recherche initiés tant au niveau institutionnel qu'au niveau gouvernemental visant à promouvoir le développement de méthodologies dédiées à l'amélioration de l'efficacité énergétique des procédés.

Un site industriel est en général constitué de trois composants :

(a) un **atelier de production**, qui effectue les étapes de traitement pour transformer des matières premières en produits finis. Dans la plupart des cas, les ateliers de production contient un certain nombre d'unités de transformation telles que les réacteurs, compresseurs, mélangeurs qui consomment des utilités sous forme d'électricité, d'eau chaude, de vapeur à différents niveaux (élevée, moyenne et basse pression) et des utilités de refroidissement (sous forme d'eau de refroidissement et de fluide réfrigérant),

(b) un **réseau d'échangeurs de chaleur** favorisant les recyclages énergétiques internes et permettant ainsi de minimiser le besoin externe en utilités,

(c) un **site de production d'utilité** qui fournit l'utilité requise pour l'atelier de production (électricité et énergie pour faire fonctionner des unités de traitement) et les utilités pour le réseau d'échangeurs (vapeur à différents niveaux de pression). On trouve dans ce type de centrale d'utilités des chaudières, des turbines, des moteurs électriques, des générateurs électriques et d'autres groupes auxiliaires de puissance (air comprimer, centrale hydraulique,etc). Toutes ces unités peuvent généralement être combinées dans de nombreuses configurations afin de satisfaire la demande en utilités.

Chacun de ces trois composants peut alors être optimisé de façon à favoriser une utilisation plus rationnelle de l'énergie.

2.1 Amélioration de l'efficacité énergétique des ateliers de production

Les deux principales méthodes utilisées pour améliorer l'efficacité énergétique dans les ateliers de production sont l'analyse exergétique et l'intensification des procédés.

2.1.1 L'analyse exergétique

L'analyse exergétique est un outil puissant pour identifier et examiner des sources de gains d'efficacité énergétique dans les installations de production. Tandis que les bilans enthalpiques visent à estimer la quantité d'énergie requise ou dégagée par les différentes opérations unitaires, l'analyse exergétique permet d'analyser le processus de dégradation de la qualité de l'énergie (aussi appelé irréversibilités) ; ce processus est quantifié par un terme de *destruction* d'exergie (à comparer avec *production* d'entropie), qui subjectivement, rend mieux compte de l'aspect négatif de ces irréversibilités sur les performances d'un procédé. Cette analyse permet ainsi de localiser dans un procédé les opérations les plus « énergivores ». D'après une étude récente réalisée pour le ministère américain de l'énergie [JVP Int. Psage & Research, 2004], l'analyse exergétique permet de comparer, sur une même base, l'efficacité de divers procédés, qu'ils comportent des échanges thermiques, des réactions chimiques, des procédés de séparation ou autres opérations mécaniques (détentes, compressions). Cette analyse permet ainsi :

- d'évaluer d'abord les pertes (ou irréversibilités) dans la plupart des systèmes,
- ensuite, d'identifier les pistes pour réduire ces inefficacités.

2.1.2 L'intensification des procédés.

Un des moyens les plus efficaces pour réduire les irréversibilités consiste à développer des processus nouveaux et innovants. Selon Marechal et al. [2005], les "nouvelles filières de production, la substitution complète des procédés énergivores par des procédés à basse énergie ainsi que des processus intégrés semblent être le principal sujet". L'intensification de processus a été pratiquée depuis plusieurs années mais c'est seulement au cours de la dernière décennie qu'elle a réellement émergé. Reay [2008] a défini l'intensification des procédés (IP) comme:

Définition

L'intensification des procédés consiste à développer des nouveaux équipements ou de nouvelles techniques qui, comparées aux techniques couramment utilisées aujourd'hui, permettront de diminuer de façon conséquente le rapport taille des équipements/capacité de production, la consommation d'énergie et la formation de produits indésirables de façon à aboutir à une technologie plus sûre et moins coûteuse.

Toutefois, la démarche qui consiste à remplacer les procédés traditionnels par des procédés intensifiés est un travail de longue haleine. Il s'agit là d'une solution à moyen terme qui ne pourra à elle seule, remédier dans un avenir proche au problème énergétique.

2.2 Développement de réseaux d'échangeurs de chaleur

De nombreuses opérations de production induisent la consommation d'énergie sous différentes formes (électricité, eau chaude, vapeur haute pression, vapeur moyenne pression, …) regroupées sous le terme d'*utilités* ou de vecteur énergétique. Au niveau d'un atelier de production industrielle, le concept d'*intégration énergétique* [Linnhoff, 1994] vise à optimiser les échanges internes à l'unité afin de réduire la consommation globale d'utilités. Cela consiste par exemple à mettre en place un réseau d'échangeurs de chaleur pour transférer l'énergie d'un point à l'autre du site d'atelier de production.

L'un des progrès majeurs dans la promotion de méthodes d'intégration de la chaleur et la conception de réseaux d'échangeurs a été le développement du concept de l'analyse Pinch [Linhoff & Hindmarsh, 1983; Linhoff, 1994]. Le trait distinctif de l'analyse du point de pincement (ou analyse pinch) est qu'elle conduit à des solutions qui sont non seulement efficaces mais également thermiquement adéquate pour traiter des problèmes industriels. En conséquence, l'analyse Pinch a connu un succès énorme dans l'industrie et est considérée aujourd'hui comme un outil indispensable pour l'entreprise. Le principe de l'analyse Pinch est largement décrit par Gundersen [2000] et Kemp [2007].

2.3 Vers une production décentralisée des utilités

Actuellement, les entreprises ont la possibilité d'acheter les utilités nécessaire à leur activité auprès de fournisseurs indépendants ou bien de les produire elles-mêmes directement sur site. Or, la tendance actuelle vise à promouvoir la production sur site des utilités de chauffage (vapeur à différents niveaux de pression) et d'acheter l'électricité à une société publique d'approvisionnement. Toutefois, les industries qui font état d'une demande importante de vapeur (industries chimiques, papèterie, usines textiles, etc) ou les usines qui ont la possibilité de valoriser leurs sous-produits et/ou déchets en les utilisant comme carburant préfèrent s'occuper elles-mêmes de la production de l'électricité.

Parmi toutes les technologies utilisées pour le site de production d'utilités, la production combinée de l'électricité et de la vapeur (aussi appelée *cogénération*) apparaît comme la technologie la plus prometteuse. Ce type de centrale de cogénération valorise la chaleur rejetée par la production d'électricité plutôt que de le libérer en pure perte dans l'atmosphère conduisant ainsi à une amélioration sensible de l'efficacité énergétique.

De nombreux travaux de recherche visent actuellement à affiner le modèle de la centrale de production d'utilités afin d'obtenir une représentation plus fidèle de son fonctionnement. Toutefois, l'analyse bibliographique a permis de montrer que jusqu'à présent, peu de travaux ont été consacrés à l'intégration de l'atelier de production avec le système de production des utilités sur le site industriel. Même si des efforts ont été déployés pour rechercher des solutions à l'échelle du site (par exemple, Maréchal et Kalitventzeff [2003]), en réalisant l'intégration énergétique globale du site industriel entier, tous ces travaux s'appuient sur une relation entre l'atelier de production et la centrale de production de type « maître/esclave ».

3. GESTION DES UNITES INDUSTRIELLES DISCONTINUES

La consommation d'énergie est nécessairement corrélée à l'activité de l'unité, donc à la gestion de sa production. Or, cet aspect est rarement pris en compte. En effet, les travaux les plus fréquents concernent plutôt la conception du réseau d'échangeurs de chaleur dans le cas d'unités fonctionnant en régime permanent pour un point de fonctionnement donné. En revanche, l'intégration des contraintes de production des utilités au sein du système de gestion de la production d'unités batch dont la dynamique induit différents régimes de fonctionnement constitue un thème original.

Contrairement aux procédés continus, les industries de fabrication par lots peuvent opérer en suivant différents régimes de fonctionnement au cours de leur exploitation ; ceci contribue à les rendre plus flexibles et leur permet de s'adapter plus aisément à une évolution de la demande. En contrepartie, cette flexibilité rend la gestion de ce type d'atelier beaucoup plus délicate. Parmi les multiples régimes de fonctionnement envisageables, il convient de sélectionner celui qui conduira à des niveaux de productivité les plus élevés possible. Dans ce contexte, ces travaux de thèse se proposent de s'intéresser aux unités de production constituées d'opérations discontinues ou semi-continues et couplés à une centrale de production d'utilités destinée à alimenter l'atelier en vapeur haute, moyenne et basse pression. Par ailleurs, cette centrale de production d'utilités étant une unité de cogénération, il permet dans le même temps de satisfaire une partie des besoins en électricité de l'atelier.

3.1 Ordonnancement des ateliers batch et gestion de l'énergie

L'ordonnancement des ateliers batch a fait l'objet de très nombreuses études durant ces vingt dernières années. Cependant, peu de modèles d'ordonnancement ont été proposés dans lesquels la gestion des utilités est explicitement prise en compte à travers un modèle spécifique. La figure RF.1 résume la démarche traditionnellement rencontrée pour l'exploitation d'une unité de production et de la centrale de production d'utilités associée. Dans cette approche, trois sous-problèmes sont résolus de manière séquentielle :

- d'abord l'ordonnancement de l'atelier de production détermine les politiques de lotissement et de lancement permettant de minimiser la durée du plan ou les niveaux du stock (par exemple),
- puis, sur la base de ce plan de fabrication, la deuxième étape estime les besoins en utilités (vapeurs haute, moyenne, basse pression, électricité,…) à l'aide des méthodes d'analyse du point de pincement ou "analyse pinch" [Corominas *et* al., 1994],
- enfin, connaissant les besoins en utilités, la dernière étape permet de réaliser la planification de la centrale de cogénération, c'est-à-dire de déterminer la valeur des flux énergétiques circulant dans l'unité pour chaque période de l'horizon de planification.

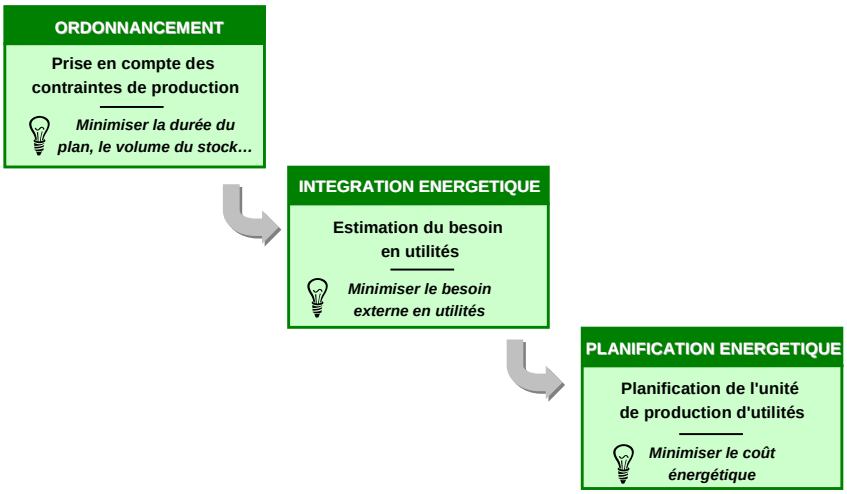

Figure RF.1: Approche traditionnellement rencontrée pour l'ordonnancement des ateliers et la gestion des centrales de production d'utilités associées

Toutefois, comme le soulignent Adonyi *et* al. [2003], le résultat de l'intégration énergétique est fortement corrélé au plan de fabrication établi. La planification de la centrale de cogénération et par conséquent, le coût énergétique global est donc lui aussi fortement dépendant du résultat de l'étape d'ordonnancement. Une approche séquentielle conduit donc nécessairement à un coût énergétique non optimisé. A l'inverse, procéder en premier lieu à la phase d'intégration énergétique conduirait inévitablement à des infaisabilités au niveau du problème d'ordonnancement. La prise en compte des aspects relatifs à la consommation énergétique dès la phase d'ordonnancement de l'atelier de production semble donc essentielle.

3.1.1 Ordonnancement des ateliers sous contraintes énergétiques

De nombreux travaux traitent de l'ordonnancement d'ateliers sous contraintes énergétiques Kondili *et* al. [1993] ont ainsi développé un modèle visant à déterminer un plan de fabrication minimisant un critère de coût incluant la consommation énergétique. Le coût de l'énergie est supposé varier durant la journée et la consommation énergétique dépend de la nature du produit fabriqué et de l'équipement utilisé. En ce sens, ce type d'approche peut être assimilé à une démarche d'ordonnancement sous contrainte de ressource.

Il faut toutefois préciser que contrairement aux ressources classiquement prises en compte dans les problèmes d'ordonnancement (machines ou encore ressources humaines), l'énergie présente des caractéristiques spécifiques qu'il convient de prendre en compte. Il s'agit en effet d'une ressource versatile qui se présente sous différentes formes (vapeur à différentes pression, électricité, eau chaude). C'est aussi une ressource difficilement stockable sous sa forme ultime. Des travaux plus récents s'attachent à prendre en considération ces particularités. Behdani *et* al. [2007] ont développé un modèle d'ordonnancement à temps continu incluant des contraintes liées à la production, à la disponibilité et à la consommation de différents types d'utilités (eau de refroidissement, électricité et vapeur). Hait *et* al. [2007] présentent une approche visant à minimiser la facture énergétique d'un atelier de fonderie soumis à des contraintes spécifiques relatives à la tarification électrique et reposant sur des stratégies de délestage.

Cependant, dans toutes ces approches, l'accent est mis avant tout sur l'unité consommatrice d'énergie, l'unité productrice d'énergie n'étant modélisée que de manière agrégée au travers de contraintes ou moyennant la modification du critère. Le mode de transformation de l'énergie primaire (énergie stockable) en énergie utile (non stockable) et des gains potentiels sur ce processus de transformation n'est en aucun cas pris en compte.

3.1.2 Planification des centrales de cogénération

Les travaux traitant de la planification des centrales de cogénération sont aussi très nombreux. Nous citerons aussi la contribution de Soylu et al. [2006] qui proposent une approche visant à calculer les flux énergétiques circulant dans une centrale de cogénération sur les différentes périodes de l'horizon de planification. Ces derniers mettent en évidence aussi les bénéfices d'une collaboration entre différentes unités de cogénération pour réduire les coûts et les émissions de gaz à effet de serre. Dans ce cas, l'étude traite exclusivement de l'unité productrice d'énergie, l'unité consommatrice n'étant modélisée que sous la forme de demandes énergétiques externes au modèle.

3.2 Vers une intégration des deux fonctions

Les travaux les plus récents commencent toutefois à se rapprocher du concept de l'intégration de procédés tels qu'il a été défini par Moita *et* al. [2005] c'est-à-dire l'intégration optimale des différentes unités composant un procédé. Dans le cas des procédés considérés dans cette contribution, il s'agit donc de développer des modèles et méthodes permettant d'optimiser simultanément les problèmes de production, d'intégration énergétique et de planification des centrales de production d'utilités. Adonyi *et* al. [2003] proposent un modèle intégrant ordonnancement des ateliers et intégration énergétique. Moita et al. [2005] ont développé un modèle dynamique comprenant une carrière d'extraction de sel, l'unité de traitement et l'unité de cogénération associée. Enfin, Zhang et Hua [2007] ont établi un modèle MILP pour la détermination optimale des points de fonctionnement d'une raffinerie couplée à une unité de cogénération.

C'est dans ce cadre que se situe l'étude exposée de la suite de ce document. Il s'agit en effet de mettre en évidence les bénéfices d'une approche intégrée pour l'ordonnancement d'ateliers de production batch ou semi-continus et la planification de la centrale de cogénération associée. Pour cela, il convient tout d'abord de développer un modèle permettant de représenter le comportement de l'atelier de production d'une part, de la centrale de production d'utilités d'autre part et la coopération entre les deux systèmes. Par ailleurs, le modèle que l'on désire obtenir dans le cadre de notre étude est un modèle générique qui serait ainsi applicable à n'importe quel type de procédé pourvu qu'il opère de manière discontinue et à n'importe quelle configuration de centrale de cogénération. Pour cela, il apparaît nécessaire de réaliser une analyse des formalismes dédiés à l'ordonnancement des ateliers existant dans la littérature.

4. FORMALISMES EXISTANT POUR L'ORDONNANCEMENT DES ATELIERS

Un problème d'ordonnancement de procédé batch met en jeu trois éléments clef :

- une *recette* qui décrit la succession des étapes physico-chimiques requises pour fabriquer le ou les produits désirés,
- la *topologie du procédé* qui décrit l'ensemble des équipements nécessaires à la réalisation de ces étapes et leur organisation physique
- et un *plan de production* qui définit les quantités de produits à fabriquer et les dates de livraison.

Pour réaliser l'ordonnancement des ateliers de production, il existe deux formalismes largement utilisés dans la littérature :

- Le « State Task Network » (STN) développé par Kondili *et* al. [1993]
- Le « Resource Task Network » (RTN) développé par Pantelides [1994].

4.1 State Task Network (STN)

Le STN est un formalisme général d'abord développé pour la représentation et la formulation du problème d'ordonnancement des procèdes. La représentation STN est un graphe biparti composé de nœuds et d'arcs. Les arcs représentent les flux de matières tandis que les nœuds représentent soit les états matériels (signalés par un cercle) ou des opérations unitaires (signalés par des carrés).

Le formalisme STN couvre divers problèmes d'ordonnancement de procèdes et tient compte de nombreuses caractéristiques requises pour les applications industriel. Cependant, la représentation STN se concentre uniquement sur la recette et ne contient pas les informations nécessaires concernant la topologie des installations, notamment les appareils dans lesquels les tâches sont exécutées. Le formalisme STN ne donne donc pas une image physique réelle de l'unité de production. De même, la disponibilité limitée des utilités est considérée soit en tant que contrainte mathématique soit en tant que terme de la fonction objectif mais n'apparait pas explicitement sur la représentation graphique. Par conséquent, formalisme STN ne peut être utilisé tel quel pour considérée simultanément un procédé batch et la centrale de cogénération.

4.2 Resource Task Network (RTN)

Pantelides [1994] a développé le formalisme Resource Task Network (RTN) dont le principal trait distinctif est qu'il traite toutes les ressources d'une manière uniforme. Ainsi, en plus de la matière, d'autres ressources (équipements de traitement, les personnels, les utilités) sont pris en compte et leurs interactions avec les tâches sont également incluse, dans la représentation graphique. Toutefois, dans le RTN, les utilités sont supposées être fournies par des sources externes indépendantes en quantité *limitée* et *connue*.

Cette hypothèse est très restrictive car chaque utilité générée dépend des régimes opérationnelles suivies par la centrale de cogénération (par exemple, l'utilisation de turbines multi-étage fixera la production de non seulement l'électricité mais aussi des flux de vapeur MP et LP).

Par ailleurs, deux autres limitations de formalisme RTN sont à considérer:

- Contrairement à l'hypothèse des ressources matérielles, elles ne sont pas toujours produites dans des proportions fixées a priori (répartition des flux variables dans la turbine).
- Il n'y a pas de distinction entre délai d'obtention et durée de la tache dans le formalisme RTN. Or, une centrale d'utilité fonctionnement selon un mode production continu et la disponibilité des utilités est suppose être immédiate des lors que la tache est lancée (et non, disponible à la fin de celle-ci).

5. FORMALISME EXTENDED RESOURCE TASK NETWORK (ERTN)

L'analyse des formalismes existants a permis de mettre en exergue les éléments manquants pour la prise en compte des ressources de type utilité. Pour cette raison, une extension des formalismes STN et RTN a été développé et nommé "Extended Resource Task Network" (ERTN) a fin de permettre de prendre compte la production et la consommation des utilités dans le cadre de l'ordonnancement des ateliers batch.

Tout comme ses prédécesseurs, le formalisme ERTN est composé d'une représentation graphique du système de production (incluant la recette et la topologie). D'autre part, ce formalisme comporte aussi une formulation mathématique générique déduite directement de cette représentation graphique.

Les éléments sémantiques ainsi que les équations relatives au formalisme ERTN sont récapitulés respectivement dans les tableaux RF.1 et RF.2.

NOM	SYMBOLE	PARAMETRES	REPRESENTE
Nœud Tâche	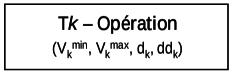	V_k^{min} : taille de lot minimale *(kg)* V_k^{max} : taille de lot maximale *(kg)* pf_k : partie fixe du temps de traitement *(h)* dd_k : délai d'obtention des matières si différent de la durée de la tâche *(h)*	opération de transformation discontinue (ou *batch*)
Nœud "ressource cumulative"		$S0_r$: quantité initiale de ressource *r* C_r^{max} : capacité maximale de stockage de la ressource *r*	ressources cumulatives (matière, utilités, financière, etc)
Nœud "ressource disjonctive"			ressources partagées de manière exclusive par différentes tâches (appareils, ressources humaines, etc).
Arc "flux fixé"	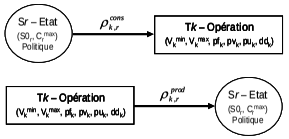	$\rho_{k,r}^{cons}$: proportion fixe de ressource *r* consommée par la tâche *k* pour les transformer en ressources sortantes $\rho_{k,r}^{prod}$: proportion fixe de ressource *r* produite par la tâche *k* par transformation des ressources entrantes	volume ou flux de matière entrant ou sortant d'un nœud tâche égal à une proportion fixée de la quantité traversant ce noeud
Arc "flux libre"		$\mu_{k,r}^{cons}, \mu_{k,r}^{prod}$: paramètres matérialisant la présence ou pas d'un flux libre. Utilisé en conjonction avec les paramètres $\rho_{k,r}^{cons}$ et $\rho_{k,r}^{prod}$ selon les règles suivantes : - si flux libre en entrée (*resp.* sortie) de la tache *k* alors $\rho_{r,k}^{cons}=0, \mu_{r,k}^{cons}=1$ (*resp.* $\rho_{r,k}^{prod}=0, \mu_{r,k}^{prod}=1$) - si flux fixé en entrée (*resp.* sortie) de la tache *k* alors $0>\rho_{r,k}^{cons}\geq 1, \mu_{r,k}^{cons}=0$ (*resp.* $0>\rho_{r,k}^{prod}\geq 1, \mu_{r,k}^{prod}=0$)	volume ou flux de matière entrant ou sortant d'un nœud tâche dans des proportions non fixées a priori et déterminées par l'optimisation.
Arc "flux consommé" ou "flux produit"	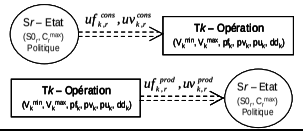	$uf_{k,r}^{cons}$: partie fixe de la consommation de ressource *r* par la tâche *k*, $uv_{k,r}^{cons}$: partie variable de la consommation de ressource *r* dépendant de la quantité de matière transformée par la tâche *k* $uf_{k,r}^{prod}$: partie fixe de la production de ressource *r* par la tâche *k*, $uv_{k,r}^{prod}$: partie variable de la production de ressource *r* dépendant de la quantité de matière transformée par la tâche *k*	volume ou flux de ressources cumulatives consommées ou produites mais non transformées lors de l'exécution d'une tâche
Arc "utilise"		IJ_{ij}: la composant $IJ_{i,j}$=1 si la tache *i* peut être réalisée sur la ressource disjonctive *j*, 0 sinon	matérialise l'utilisation d'une ressource disjonctive par une tâche

Tableau RF.2: Equations relatives au formalisme ERTN

NOM	SYMBOLE	EQUATION	
Tâche capacité contrainte	Task k (V_k^{min}, V_k^{max}, p_k, dd_k)	$0 \le R_{r,t} \le C_r^{\max}$ $\quad \forall r \in R, \forall t \in T$	[Eq. IV-1]
Cumulatif ressource capacité contriante	Resource Name ($R0_r$, C_r^{max})	$W_{k,t} V_k^{\min} \le B_{k,t} \le W_{k,t} V_k^{\max}$ $\quad \forall k \in K, \forall t \in T$	[Eq. IV-2]
Contrainte d'allocation	Resource Name — Task k (V_k^{min}, V_k^{max}, p_k, dd_k)	$\sum_{k \in K} \sum_{t'=t-p_k+1}^{t} W_{k,t'} \le 1$ $\quad \forall j \in J, \forall t \in T$	[Eq. IV-3]
Contraintes de bilan matière de ressource	$UI_{r,kt}$, $O_{r,kt}$, $O_{r,kt}$, $O_{r,kt}$, $In_{r,t}$, $I_{r,kt}$, $I_{r,kt}$, $Out_{r,t}$, $UO_{r,kt}$; R ($R0_r$, C_r^{max})	$R_{r,t} = R_{r,t-1} + \sum_{k \in K} O_{r,k,t-dd_k} - \sum_{k \in K} I_{r,k,t} + \sum_{k \in K} UO_{r,k,t-dd_k} - \sum_{i \in I} UI_{r,i,t} + In_{r,t} - Out_{r,t}$ $\quad \forall r \in R, \forall t \in T$	[Eq. IV-4]
		$R_{r,0} = R0_r$ $\quad \forall r \in R, \forall t \in T$	[Eq. IV-5]
		$Out_{r,t}^{\min} \le Out_{r,t} \le Out_{r,t}^{\max}$ $\quad \forall r \in R, \forall t \in T$	[Eq. IV-6]
		$In_{r,t}^{\min} \le In_{r,t} \le In_{r,t}^{\max}$ $\quad \forall r \in R, \forall t \in T$	[Eq. IV-7]
		$Out_{r,t}^{\min} = Out_{r,t}^{\max} = D_{r,t}$ $\quad \forall r \in R, \forall t \in T$	[Eq. IV-8]
Contraintes de bilan matière de tâche	R1 ($R0_1$, C_1^{max}); R2 ($R0_2$, C_2^{max}); R3 ($R0_3$, C_3^{max}); R4 ($R0_4$, C_4^{max}); R5 ($R0_5$, C_5^{max}); Task k (V_k^{min}, V_k^{max}, p_k, dd_k)	$B_{k,t} = \sum_{r \in R_k^{prod}} O_{r,k,t}$ $\quad \forall k \in K, \forall t \in T$	[Eq. IV-9]
		$B_{k,t} = \sum_{r \in R_k^{cons}} I_{r,k,t}$ $\quad \forall k \in K, \forall t \in T$	[Eq. IV-10]
		$O_{r,k,t} \le (\rho_{k,r}^{prod} + \mu_{k,r}^{prod}) B_{k,t}$ $\quad \forall k \in K, \forall r \in R_k^{prod}, \forall t \in T$	[Eq. IV-11]
		$O_{s,k,t} \ge \rho_{k,s}^{prod} B_{k,t}$ $\quad \forall k \in K, \forall r \in R_k^{prod}, \forall t \in T$	[Eq. IV-12]
		$I_{s,k,t} \le (\rho_{k,s}^{cons} + \mu_{k,s}^{cons}) B_{k,t}$ $\quad \forall k \in K, \forall r \in R_k^{cons}, \forall t \in T$	[Eq. IV-13]
		$I_{s,k,t} \ge \rho_{k,s}^{cons} B_{k,t}$ $\quad \forall k \in K, \forall r \in R_k^{cons}, \forall t \in T$	[Eq. IV-14]
Consommation de ressource cumulatif	Resource Name ($R0_r$, C_r^{max}) — $uf_{k,r}^{cons}$, $uv_{k,r}^{cons}$ — Task k (V_k^{min}, V_k^{max}, p_k, dd_k)	$UI_{s,k,t} = ufi_{k,s} W_{k,t} + uvi_{k,s} \sum_{\theta=t-p_k+1}^{t} B_{k,\theta}$ $\quad \forall r \in R, \forall k \in K, \forall t \in T$	[Eq. IV-15]
Production de ressource cumulatif	Task k (V_k^{min}, V_k^{max}, p_k, dd_k) — $uf_{k,r}^{prod}$, $uv_{k,r}^{prod}$ — Resource Name ($R0_r$, C_r^{max})	$UO_{s,k,t} = ufo_{k,s} W_{k,t} + uvo_{k,s} \sum_{\theta=t-p_k+1}^{t} B_{k,\theta}$ $\quad \forall r \in R, \forall k \in K, \forall t \in T$	[Eq. IV-16]
La modélisation d'équipements multimode	Task $k1$ (V_{k1}^{min}, V_{k1}^{max}, p_{k1}, dd_{k1}); Task $k2$ (V_{k2}^{min}, V_{k2}^{max}, p_{k2}, dd_{k2})	$W_{k,t+1} = W_{k,t} + (1 - W_{k,t-1})$ $\quad \forall j \in J^{start}, \forall k \in K_j^{op}, \forall t \in 2,..,T-1$	[Eq. IV-17]
		$W_{k',t} \ge W_{k,t+1} - W_{k,t}$ $\quad \forall j \in J^{start}, \forall k \in K^{op}, \forall k' \in K_j^{start}, \forall t \in 2,..,T-1$	[Eq. IV-18]
		$W_{k',t} \le W_{k,t+1}$ $\quad \forall j \in J^{start}, \forall k \in K^{op}, \forall k' \in K_j^{start}, \forall t \in 2,..,T-1$	[Eq. IV-19]

Les principaux apports du formalisme ERTN résident dans :

- L'introduction de la notion d' « arc à flux libre » ; ces derniers permettent de considérer que les débits de certains flux sortant d'une tâche sont des proportions variables de la taille du lot. Il est ainsi possible de modéliser des équipements telles que les turbines multi-étagées dont les flux de vapeur à différentes pression sont des variables du problème d'optimisation.
- L'introduction de la notion de « délai d'obtention » distinct du « temps opératoire ». Un délai d'obtention fixé à 0 permet de modéliser des opérations continues ou semi-continues comme la fabrication de vapeur haute pression par une chaudière ou la production d'électricité par une turbine.

Par ailleurs, le formalisme ERTN permet une relation directe entre la représentation graphique et la formulation mathématique. A chaque élément sémantique correspond un ensemble de contraintes mathématiques. Cette généricité ouvre la voie au développement d'un logiciel de modélisation qui à partir de la représentation graphique du comportement du système permettrait non seulement la validation du modèle mais aussi la génération automatique du modèle mathématique.

6. APPROCHE INTEGREE VS APPROCHE SEQUENTIELLE : UNE APPLICATION DE FORMALISME ERTN

Le formalisme ERTN développé est exploité en vue de la comparaison entre l'approche séquentielle et l'approche intégrée pour l'ordonnancement des procédés batch et la centrale de production d'utilités associée. Afin de mener à bien cette comparaison, trois ateliers de production batch différents associés à la même unité de cogénération sont considérés.

Un de ces exemples est présenté dans la figure RF.2.

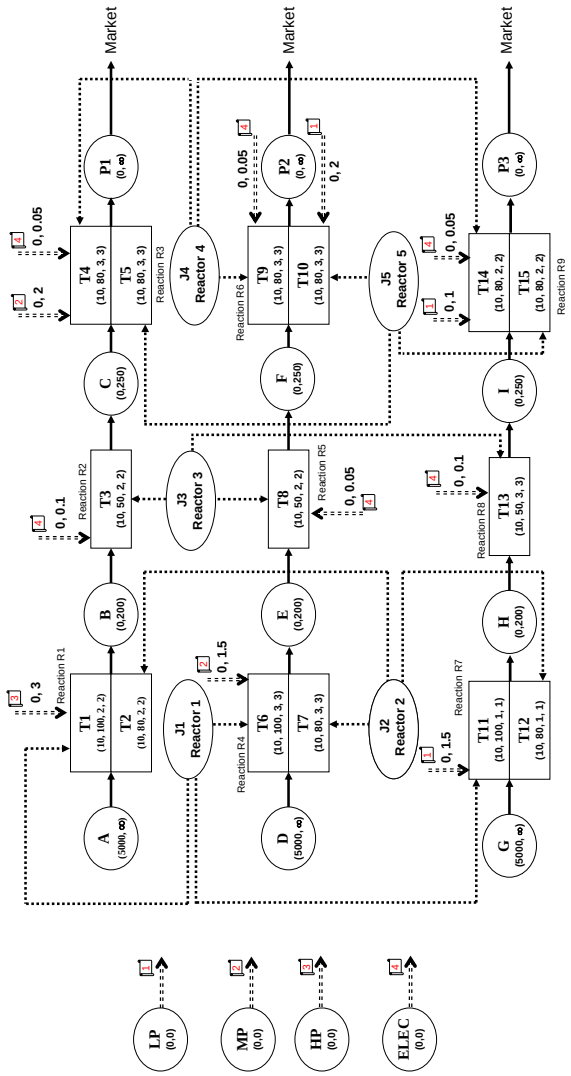

Figure RF.2: Représentation ERTN de l'atelier de production pour l'exemple 1

La représentation ERTN de décrire toutes les fonctionnalités clés et les exigences relatives aux données de l'atelier de production.

- Les 'nœuds tâches', les 'nœuds ressources cumulative' et les arcs 'flux fixe' définissent la recette.

- Les nœuds ‘ressources disjonctives’ et les arcs ‘utilise’ définissent la topologie de l'atelier de production.
- Les informations relatives au temps requis pour les opérations de traitement effectuées par chacun des équipements sont représentés par le ‘nœud tâche’ qui affiche clairement la durée de la tâche.
- Les informations relatives aux utilités consommées et/ou produites lors de l'exécution de chaque tâche sont fournies par les arcs ‘flux consommé’ et ‘flux produit’.

Le diagramme ERTN de la centrale de cogénération est représenté sur la figure RF.3. Le fonctionnement de la chaudière a été simplifié pour des raisons de clarté. Le fonctionnement détaillé de la chaudière est représenté sur la figure RF.4.

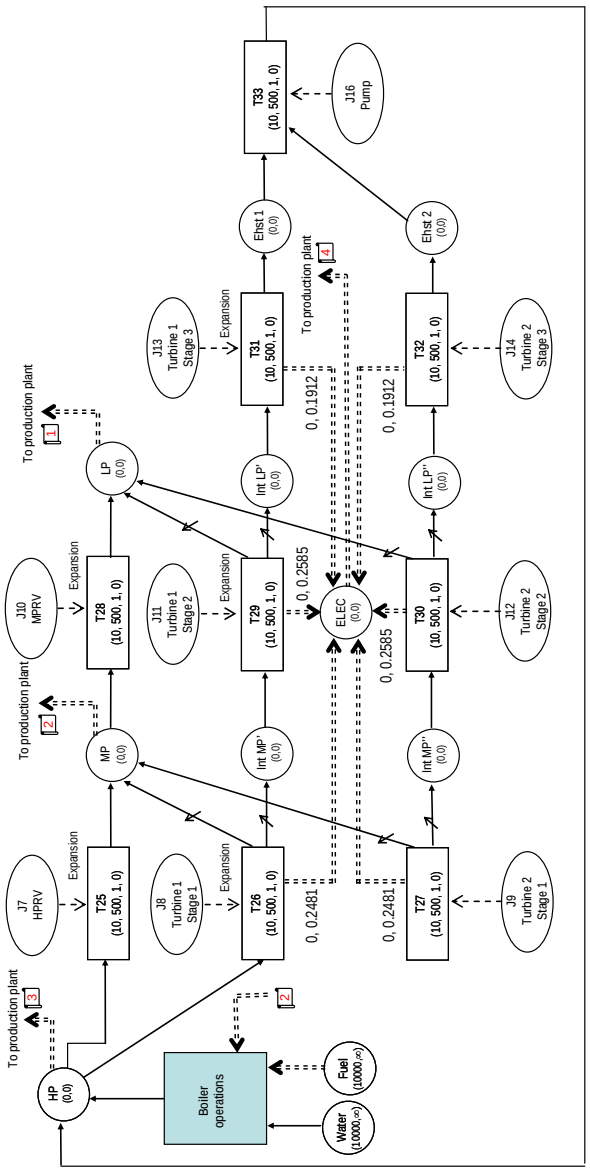

Figure RF.3: Représentation ERTN de la centrale de cogénération

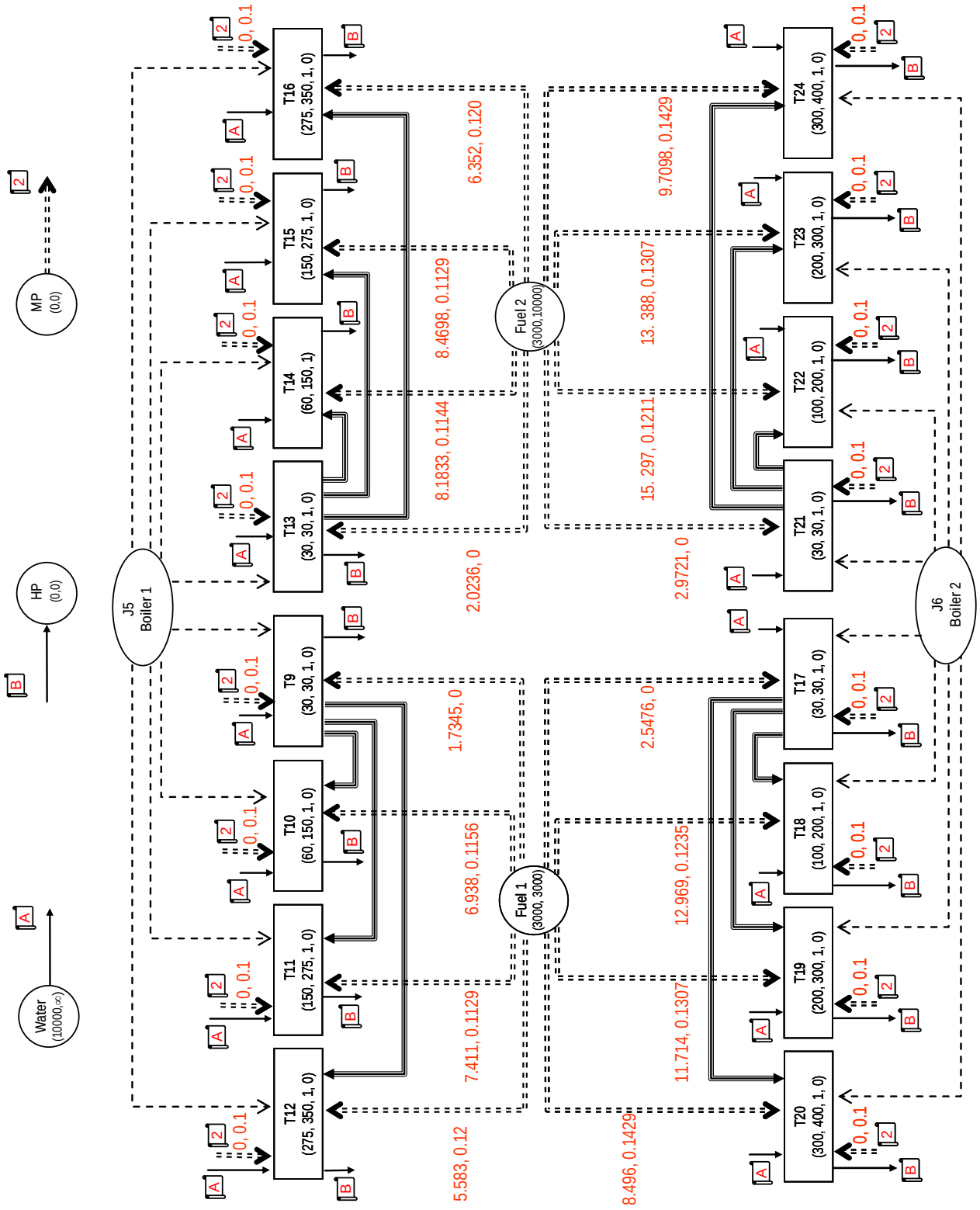

Figure RF.4: Représentation ERTN du fonctionnement de la chaudière

6.1 Les résultats

6.1.1 Coûts globale de l'énergie

L'utilisation de l'approche intégrée conduit à d'importantes économies d'énergie. Dans cet exemple, la réduction de coût global en énergie s'étend de 15% à 30% (figure RF.5). Toutefois, ce gain diminue lorsque l'usine de production fonctionne près de sa capacité maximale. Dans ces conditions en effet, l'usine de production possède un degré relativement moindre de liberté dans le déplacement et la réorganisation des tâches. Par conséquent, les gains plus faibles en coût de l'énergie soient obtenus.

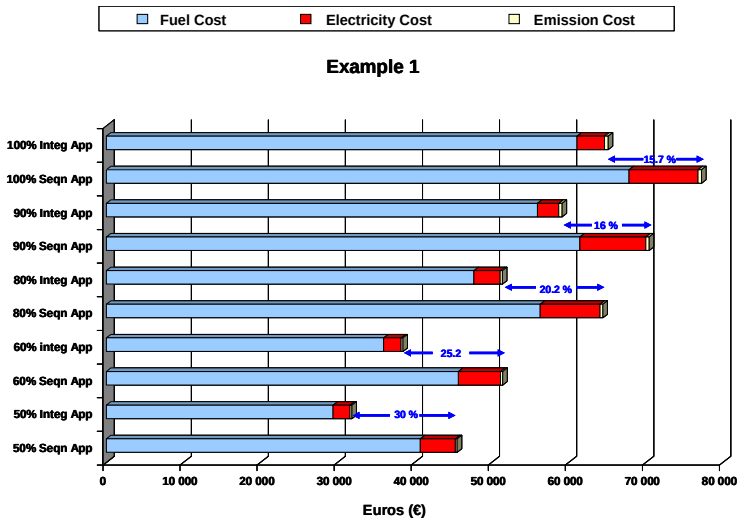

Figure RF.5: Couts globale de l'énergie

6.1.2 Réduction des émissions de gaz nocifs

En termes d'émissions de gaz à effet de serre (GES), des réductions notables sont obtenues en utilisant l'approche intégrée – entre 8% et 24% (figure RF.6). Par contre, les émissions de SO_x augmenter légèrement en raison de l'approche intégrée. Cette augmentation s'explique par la valeur des paramètres retenus dans le problème ; en effet le combustible le moins polluant atteint sa limite de capacité et l'atelier est obligé d'utiliser un carburant qui est plus polluant.

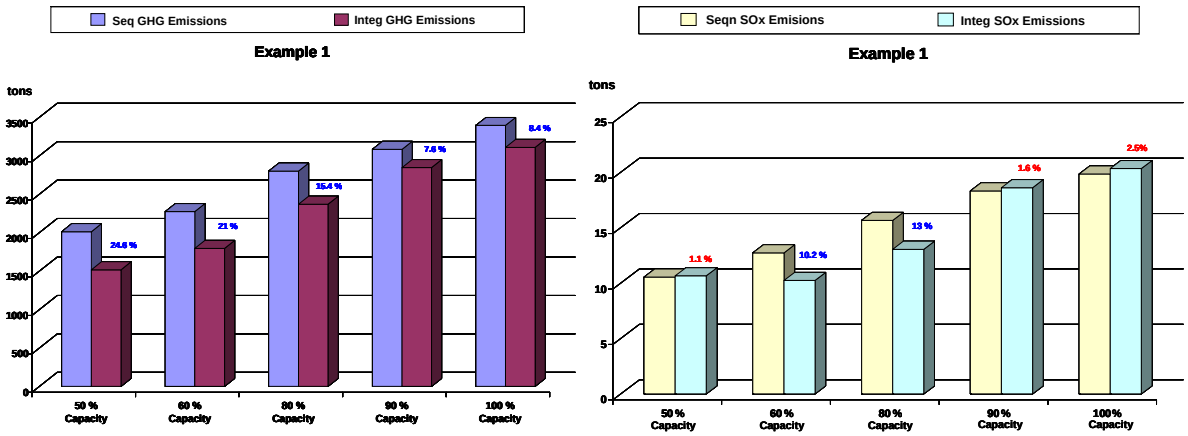

Figure RF.6: Emissions de gaz nocifs

6.1.3 Amélioration de l'efficacité de la cogénération

Les turbines sont globalement beaucoup mieux exploitées dans l'approche intégrée (figure RF.7). Le ratio moyen d'utilisation des turbines dans le cas de l'approche séquentielle est seulement d'environ 65% pour l'exemple. Dans le cas de l'approche intégrée, le ratio moyen d'utilisation des turbines passe à 92%. Il ressort clairement de la figure RF.7 que l'approche intégrée permet de maximiser l'utilisation du fonctionnement d'une turbine et limite l'utilisation des vannes de détente, conduisant ainsi à une plus production d'électricité sur place et une moindre dépendance extérieure de fournisseur d'électricité.

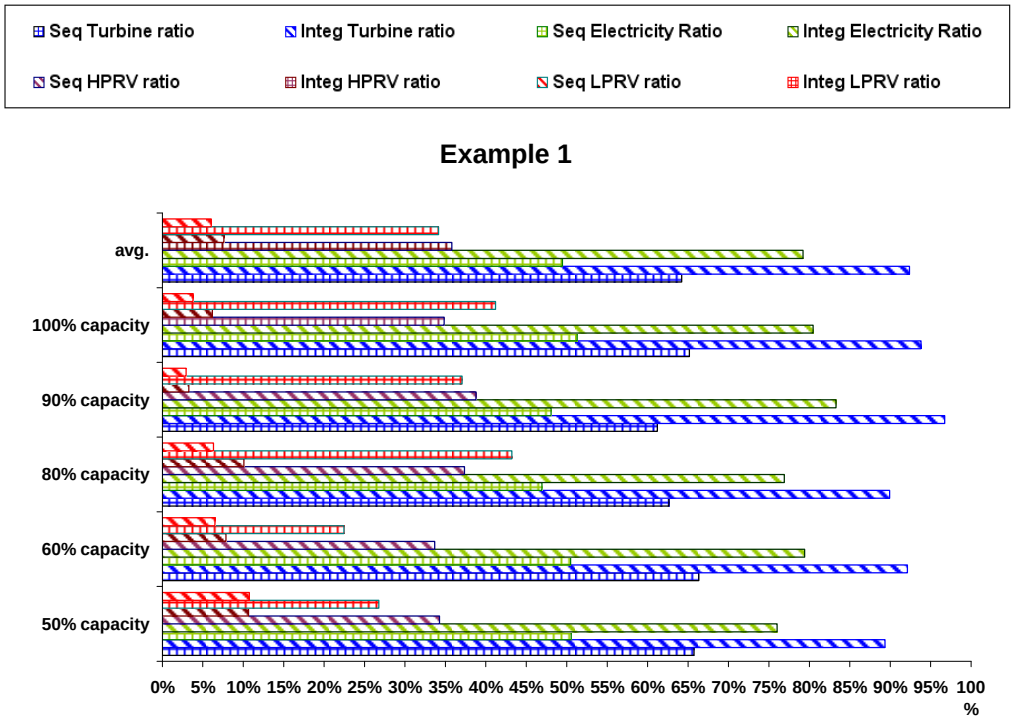

Figure RF.7: Flux de ratios pour l'exemple 1

6.1.4 Amélioration de la cohérence des décisions

Le plan de production établi permet en effet de satisfaire les contraintes liées à l'exploitation de la centrale de production d'utilités. Par exemple Pour le scénario dans lequel l'atelier de production fonctionne à 90% la capacité maximale, la figure RF.8 présente diagrammes de Gantt représentant l'ordonnancement d'atelier de production mais aussi la planification opérationnelle des centrales de cogénération (production de vapeur représenté par des courbes de charge).

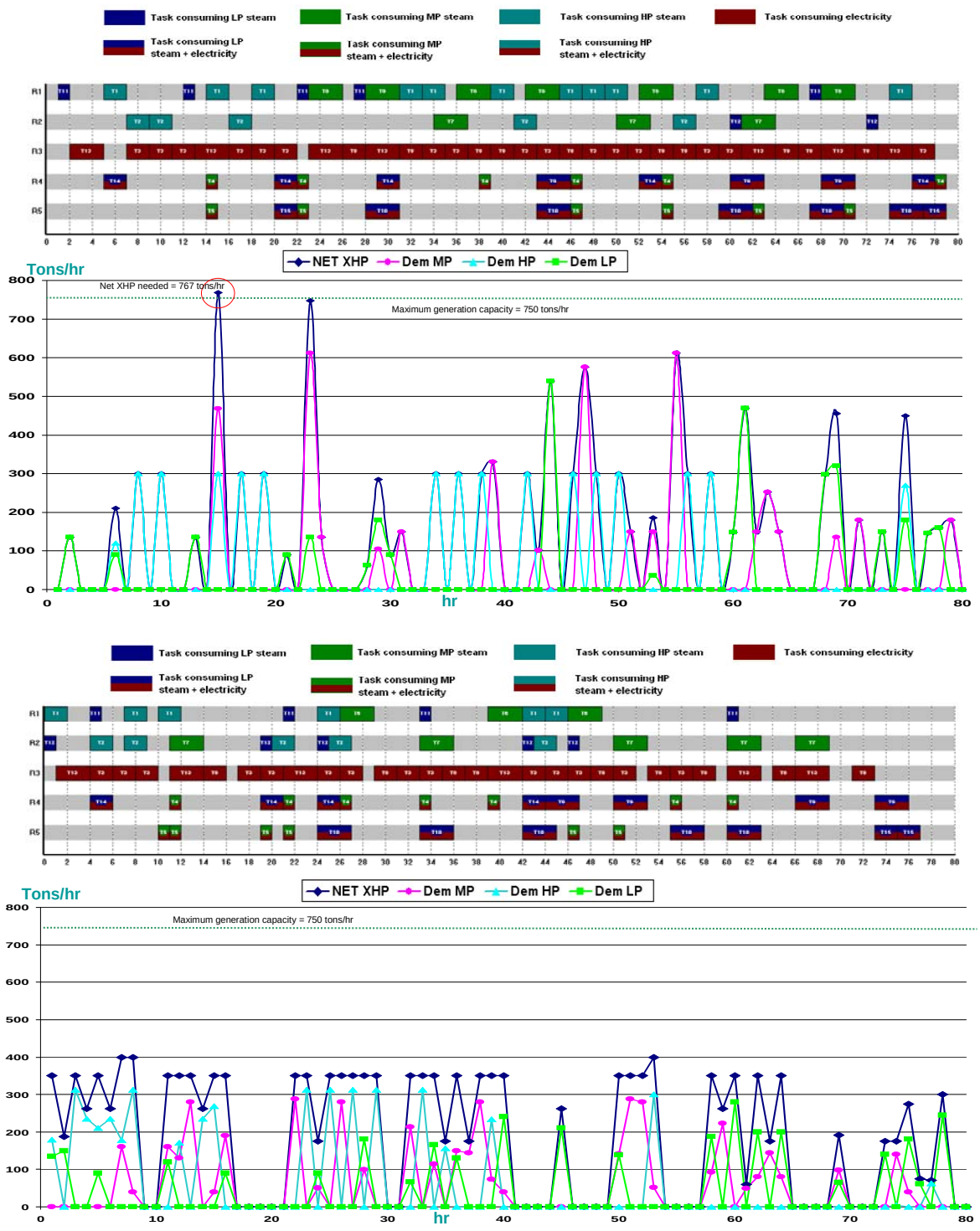

Figure RF.8: Flux de ratios pour l'exemple 1

L'approche séquentielle calcule l'ordonnancement des tâches sans tenir compte des contraintes opérationnelles de la centrale de cogénération. En conséquence, non seulement il existe des variations énormes dans les courbes de charge de la vapeur mais au cours de la période t = 15, la demande de vapeur de l'atelier de production dépasse la capacité de production de la centrale de cogénération. Cela se traduit dans l'approche séquentielle par une demande de vapeur émise par l'atelier de production impossible à satisfaire au niveau de la centrale de cogénération. Dans le cas l'approche intégrée au contraire, les tâches sont décalées et réarrangées de manière à ce que les besoins en utilités ne dépassent jamais la capacité de la centrale de cogénération.

6.1.5 Lissage de la production des utilités vapeur

Les arrêts et redémarrages successifs des chaudières étant un processus coûteux, l'approche intégrée permet de réduire ces séquences; on aboutit ainsi à un lissage de la consommation vapeur. Dans l'approche séquentielle, la centrale de cogénération est considérée comme une fonction d'appui dont le rôle est de suivre simplement l'ordonnancement de l'atelier de production. Il en résulte des variations aléatoires et rapides dans les courbes de vapeur (figure RF.9). Toutefois, dans le cas de l'approche intégrée l'ordonnancement de la centrale de cogénération est également pris en compte, ce qui se traduit par le lissage des courbes de vapeur.

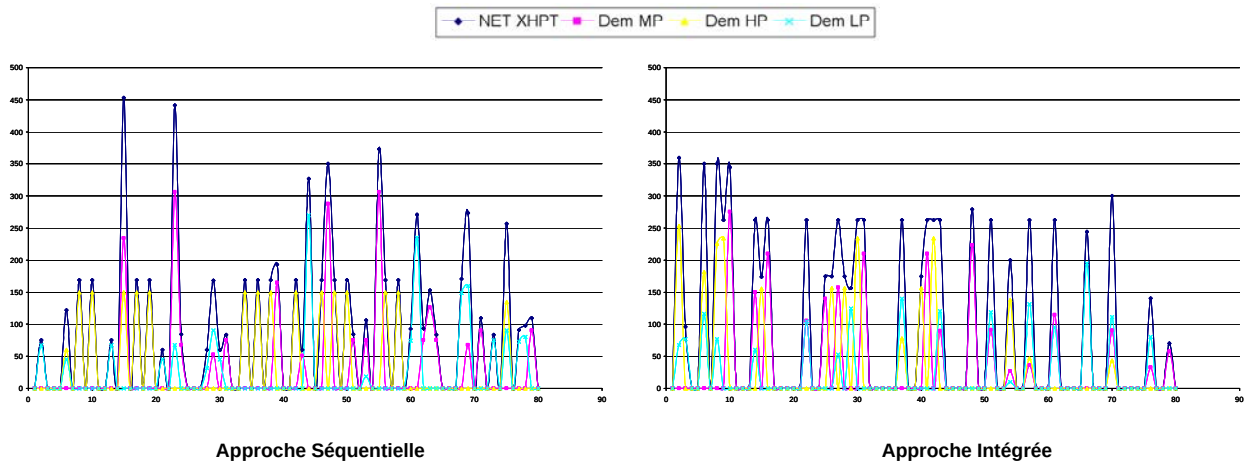

Figure RF.9: Courbes des vapeurs pour l'exemple 1 fonctionnant à 90% de son capacité

6.1.6 Temps de calcul

Le tableau RF.3 présente une comparaison des temps calcul dans le cas de l'approche séquentielle et dans le cas de l'approche intégrée.

Tableau RF.3 : Historique de la convergence de l'exemple 1

Capacité	Approche	Mieux Solution	Ecart (%)	Temps de mieux solution	Temps totale d'itération
50%	Séquentielle	45 529,1	0.0	2 min 48.6s	3 min 26.9s
	Intégrée	31 868,7	6,83	22 min 23.5s	30 min 1s
60%	Séquentielle	51 436,2	0.0	20 min 26.8s	22 min 26.8s
	Intégrée	38 182,3	7,15	30 min 4s	30 min 7.2s
80%	Séquentielle	64 434,9	0.0	5 min55.9s	5 min 55.9s
	Intégrée	51 388,4	7.57	22 min 8.9s	30 min 4.3s
90%	Séquentielle	70 433,3	0.89	25 min 8.0s	32 min 16.4s
	Intégrée	59 129,8	9.60	20 min 47.3s	30 min 5.2s
100%	Séquentielle	77 220	0.0	30 min 30.5s	30 min 30.5s
	Intégrée	65 116,9	8.75	8 hr 17 min 22s	8 hr 32 min 57s

Le tableau montre les résultats obtenus dans le cas de cet exemple. L'approche séquentielle est généralement plus rapide, n'induit souvent pas d'écart de convergence (la seule exception étant le fonctionnement de l'usine de production à pleine capacité 90%). Néanmoins, il est important de noter que dans la plupart des cas, les solutions obtenues au bout de quelques minutes de calcul par l'approche intégrée sont déjà supérieurs aux résultats obtenus par l'approche séquentielle après optimisation complète.

7. PERSPECTIVES

Le travail présenté dans ce document est une première étape vers le développement d'une méthodologie générique dédiée à la promotion d'une utilisation plus rationnelle de l'énergie sur les sites industriels. Au cours de ces travaux, plusieurs axes de recherches à venir ont en effet été identifiés; Ces axes concernent la modélisation des activités de production et des centrales de production d'utilités, la stratégie de résolution adoptée mais aussi les applications de la démarche.

7.1 Modélisation affinée des activités de production consommatrices d'utilités

Différentes contraintes de fonctionnement spécifiques aux procédés discontinus sont à prendre en compte afin d'affiner leur modélisation. Parmi celles-ci, citons :

- *les contraintes de nettoyages en séquence ou en fréquence*. Ces opérations non productives mais fortement consommatrices d'utilités (eau chaude, notamment) ont un impact important sur l'ordonnancement des tâches de fabrication. En effet, les nettoyages sont traditionnellement gérés vis à vis du critère de « makespan ». Or, les utilités nécessaires à leur exécution sont des ressources dont la disponibilité est souvent limitée du fait de leur production et qui induisent un coût énergétique.
- *les opérations dont la durée opératoire dépend de la taille du batch*. La taille des batch sont des variables de décisions contraintes par les bilans matières et utilisées pour évaluer la consommation induite en utilités. En revanche, dans les modèles précédents, seules les opérations de durée fixe (donc, indépendant de cette taille) ont été considérées. Pour rendre plus général notre modèle, il est nécessaire de prendre aussi en compte des opérations unitaires dont la durée est une fonction du volume de matière à traiter.
- *les opérations dont la durée opératoire dépend de la quantité d'utilité consommée*. Un autre degré de flexibilité disponible est la dépendance entre la durée d'une opération et la puissance consommée. Par exemple, la durée d'une opération de chauffe peut être allongée ou raccourcie en fonction de la puissance électrique fournie. Ainsi, la marge sur la date de lancement d'une tâche peut autoriser l'allongement de sa durée afin de réduire la consommation d'énergie. Inversement, celle-ci peut être raccourcie afin de satisfaire une contrainte de date de livraison, si le compromis est favorable.
- *Le découpage d'opération en phases consommant différentes utilités*. Une opération peut être consommatrice de plusieurs utilités différentes. Cette consommation peut être simultanée (hypothèse retenue dans les modèles précédents) ou au contraire, séquentielle. Dans ce dernier cas, ces utilités sont utilisées successivement par les différentes phases de l'opération (selon la terminologie de la norme *ISA SP88*). Par exemple, une réaction nécessite souvent au départ un préchauffage puis en fin, un refroidissement. Par conséquent, afin d'obtenir une localisation temporelle plus précise des besoins en utilités (qualité et quantité) et ainsi, offrir plus de flexibilité à la centrale de production, il est nécessaire d'affiner le modèle de l'unité de production en ne raisonnant plus au niveau *opération*, mais à un niveau *phase*.

La mise en œuvre de ces nouvelles contraintes nécessite l'évolution de nos modèles vers des formulations *MILP* à temps continu (du type *Global Time Point*, *Unit Specific Time Event*, etc) dans lesquelles les aspects temporels sont gérés de manière plus stricte. Une formulation de type *MINLP* est aussi à envisager, selon la finesse avec laquelle sera prise en compte certaines hypothèses citées précédemment. Par ailleurs, il semble nécessaire de définir un formalisme générique permettant de décrire sans ambiguïté la recette de site du procédé considéré. Notamment, une extension du formalisme ER*TN* est envisagée dans lequel apparaitrait explicitement les phases de chaque opération ainsi que la qualité et la proportion des utilités nécessaires à

chaque phase (s'il y a lieu). Dans ce cadre, une évolution du premier prototype de générateur de modèle à partir d'un *ERTN* est aussi nécessaire.

7.2 Modélisation des centrales de production d'utilités

Comme pour le modèle de l'unité de production, il s'agit d'affiner le modèle de la centrale de production d'utilités afin d'obtenir une représentation plus fidèle de son fonctionnement. Dans ce cadre, il est envisagé un rapprochement avec la société *ProSim S.A.* avec qui le LGC a déjà un contact privilégié. En effet, parmi les solutions commercialisées par cette PME toulousaine, le logiciel *Ariane* est dédié à la simulation et à l'optimisation des centrales de production d'énergie à partir de besoins fournis en entrée. Ce système permet notamment de répondre efficacement aux défis rencontrés quotidiennement par les industriels en représentant précisément les procédés de production d'utilités et l'ensemble des aspects techniques et économiques associés (gestion des coûts de production des utilités, contrôle efficace des émissions polluantes, etc). Leur expérience dans la modélisation de ce type de système serait donc un atout important pour la mise en œuvre de notre approche de gestion.

De plus, afin de tendre vers la problématique multi-site, de nouvelles hypothèses sont à ajouter telles que la revente possible de l'électricité excédentaire ou du « CO_2 », les coûts d'achat (énergie primaire et utilités) variables selon la plage temporelle et le volume approvisionné, la satisfaction de demandes externes en utilités définies comme un objectif et non comme une contrainte, etc.

7.3 Aspects algorithmique et résolution numérique

L'évolution de ces différents modèles risque de conduire inévitablement à une augmentation de la combinatoire et donc d'aboutir à des problèmes de résolution numérique. Si l'exploitation de solveurs basés sur des méthodes exactes (tel que XPRESS-MP pour notre part) s'avère suffisante actuellement, la mise en œuvre de méthodes alternatives doit être envisagée. Plusieurs approches peuvent être étudiées selon les verrous rencontrés. Il peut s'agir de méthodes d'optimisation mieux adaptées pour gérer la combinatoire comme :

- la mise en œuvre de méthodes stochastiques d'optimisation (tels que les algorithmes génétiques),
- l'utilisation de la programmation par contrainte, mais aussi, la conception et le développement de processus de résolution basés sur des affinements successifs de solution comme :
- l'exploitation de la simulation dynamique hybride couplée à des modules d'optimisation dans un processus itératif,
- la mise en place de structure de décision multi-niveaux basée sur des processus d'agrégation de données et de désagrégation de décisions.

7.4 Développement d'un outil logiciel

Concernant l'outil logiciel, le formalisme ERTN permet de développer une relation directe entre la présentation graphique et la formulation mathématique. Par conséquent, il est facile de développer ce formalisme dans un logiciel informatique. L'étude a proposé un premier prototype d'une application logicielle permettant l'analyse des résultats obtenus à l'issu de la phase d'ordonnancement de l'unité batch et de la centrale de cogénération. Mais à l'avenir, un modèle plus global peut être développé. Ce logiciel serait composé de trois modules:

- Un préprocesseur, appelé «générateur ERTN» qui permettrait à l'utilisateur de définir son problème en s'appuyant par représentation ERTN. Ensuite, le préprocesseur pourrait vérifier le modèle. S'ils sont

exacts, ces informations seraient ensuite transmis au solveur d'optimisation sous forme d'un code informatique.

- Le solveur d'optimisation (XPRESS, par exemple) calcule alors la solution optimale et généré les résultats sous forme de fichier de données.
- Enfin, ce fichier de données serait alors lu par le post-processeur, appelé «GANTTChart» qui présentera les résultats d'ordonnancement dans une interface utilisateur graphique conviviale. La première tentative visant à développer le post-processeur a été lancé dans cette étude, en a conduit à l'élaboration du diagramme de Gantt et la visualisation d'autres résultats importants de planification (par exemple batchsizes, des stocks matière, ratio turbines, etc) dans un format graphique simplifiée.

7.5 Application sur un cas industriel

Concernant les éventuelles applications de la démarche, il convient de rappeler que pour l'heure la méthodologie n'a été appliquée qu'à des exemples académiques. Or, il est clair que l'on ne pourra définitivement conclure à l'efficacité de notre approche que lorsqu'elle aura été appliquée à des cas réels issus de l'industrie. Il s'agit là d'une perspective à court terme qui ne pourra être menée à bien qu'au travers de la participation à des projets faisant intervenir des partenaires industriels. Les industries papetières, très grosses consommatrices d'énergie et faisant état de procédés batch et/ou semi continus apparaissent comme des cibles particulièrement appropriées.

7.6 Gestion multisite

Par ailleurs, on constate une volonté plus marquée des entreprises de se regrouper afin de constituer des réseaux leur permettant une utilisation plus rationnelle des utilités. Ainsi, par exemple, une expérience menée au Danemark a permis de mettre en place une « *symbiose industrielle* » entre cinq grandes entreprises d'une même région [Caddet, 1999]. La construction d'un véritable réseau d'échange de flux énergétiques entre ces entreprises a ainsi permis de réduire notablement la consommation d'énergie globale de ces unités de production. C'est le concept de "*parc éco-industriels*" [Gibbs et Deutz, 2007]. L'extension de notre méthodologie à la gestion de ce type des structures apparait alors comme une solution prometteuse pour la généralisation de ce type de pratique.

Pour terminer, bien que moins populaires que la recherche de technologies alternatives pour la conversion d'énergie, la recherche de solutions visant à améliorer l'efficacité énergétique des procédés apparaît aujourd'hui comme une thématique de recherche de première importance. Il s'agit là de rechercher des solutions à très court terme qui pourront permettre de donner du temps aux nouvelles technologies d'arriver à maturation. Et alors même que les ressources en combustibles fossiles auront été épuisées, les nouvelles approches ainsi mises en œuvre constitueront des règles de bonnes conduite qu'il sera toujours de bon ton d'adopter.

APPENDIXES

APPENDIX A

SAME STN REPRESENTATION LEADING TO MULTIPLE RTN REPRESENTATIONS

The advantage of using RTN representation will be established in this section. For this purpose consider a batch production plant

A.1 PRODUCT RECIPE

The production recipe that converts 3 raw materials (A, B and C) into 4 intermediate products (Hot A, Int AB, Int BC and Impure P2) and 2 finished products (P1 and P2).

Table A.1 : Resource allocation matrix for example 2

Process	Description	Explanation
Heating	$A \xrightarrow{heat} Hot\ A$	Heat feed A for 1 hour
Reaction R1	$B+C \longrightarrow 2 \cdot IntBC$	Mix 50% B and 50% feed C and let them react for 2 h to form intermediate BC.
Reaction R2	$3 \cdot Int\ BC + 2 \cdot A \longrightarrow 3 \cdot Int\ AB + 2 \cdot P1$	Mix 40% of feed A and 60% of intermediate BC and let them react for 2 h to form intermediate BC (75%) and impure P2 (25%).
Reaction R3	$4 \cdot Int\ AB + 2 \cdot D \longrightarrow 5 \cdot impure\ P2$	Mix 70% of intermediate BC and 30% of feed D and let them react for 1 h to form Impure P2.
Separation	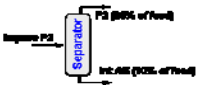	Separation: Distill impure P2 for 2h to separate 90% of pure product 2 and 10% of Int AB, which is recycled back.

A.2 PLANT TYPOLOGY 1

The production plant uses three processing equipments (heater, reactor 1 and separator) to perform the conversion of raw materials into intermediate and subsequently finished products. The process operation heating and separation performed uniquely in heater and separator.

On the other hand, the process operations reaction R1, R2 & R3 can be performed in Reactor 1. However during a time period, only one process operation can be performed in the Reactor 1

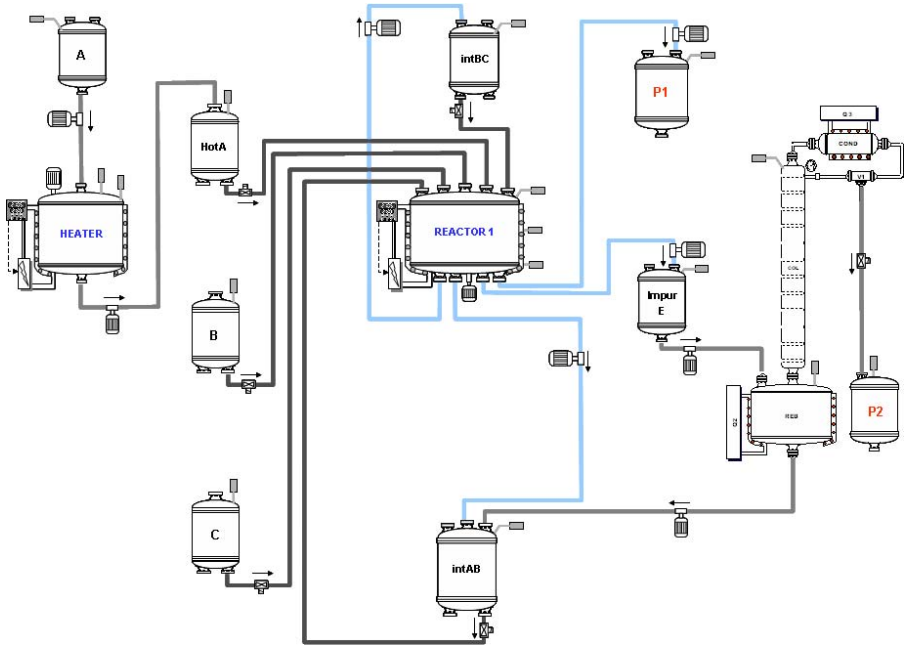

Figure A.1: Plant topology 1 with one reactor R1 performing Reaction R1, R2 & R3.

A.2.1 STN Representation in case of Plant Topology 1

The STN Representation of the batch process for plant topology 1 is given below:

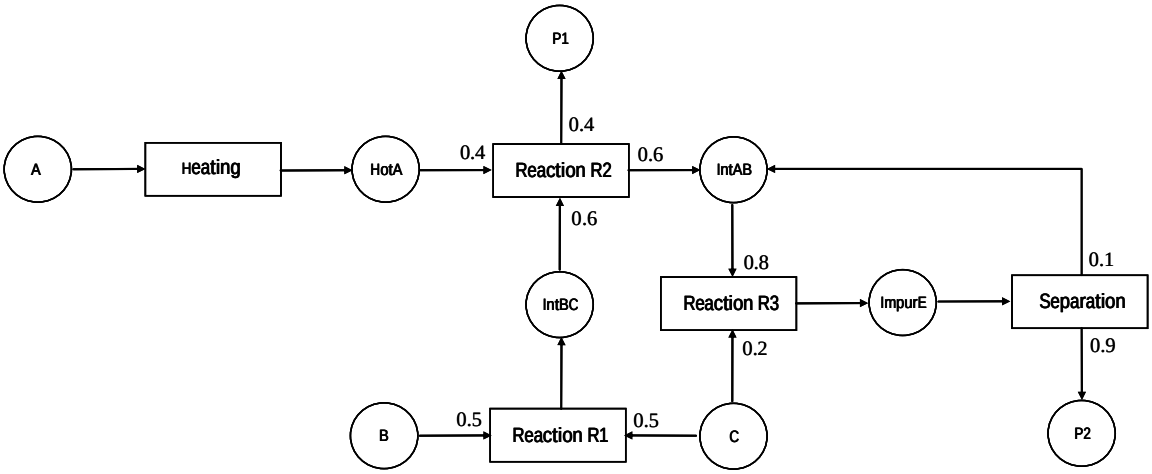

Figure A.2: STN representation of the batch production process for plant topology 1

A.2.2 RTN Representation in case of Plant Topology 1

The RTN Representation of the batch process for plant topology 1 is given below:

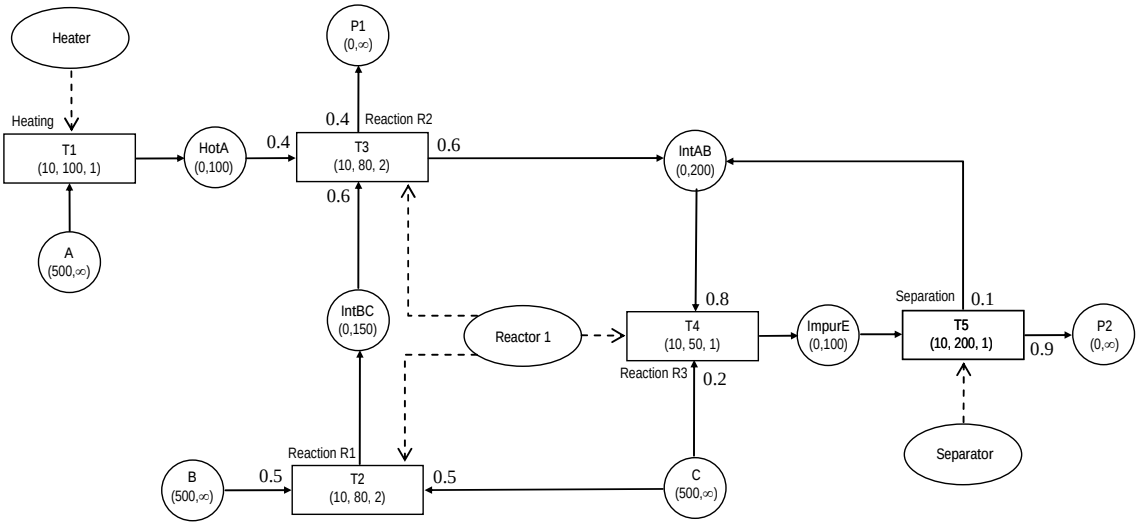

Figure A.3: RTN representation of the batch production process in case of plant topology 1

The RTN and STN are quite similar. The only difference is that the RTN representation contains details about both the product recipe and plant topology.

A.3 PLANT TYPOLOGY 2

Now consider the case where the production plant uses four processing equipments (heater, reactor 1, reactor 2 and separator) to perform the conversion of raw materials into intermediate and subsequently finished products. The process operation heating and separation performed uniquely in heater and separator.

On the other hand, the process operations reaction R1, R2 & R3 can be performed either in Reactor 1 or Reactor 2.

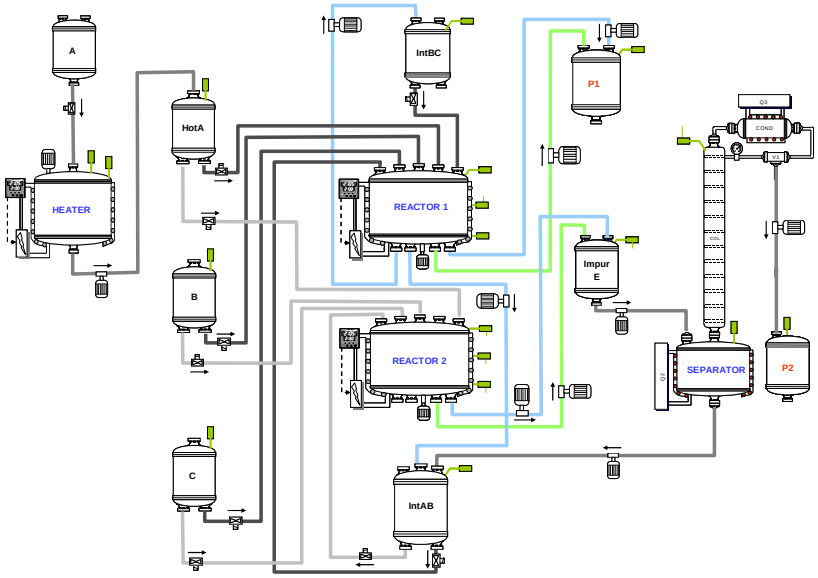

Figure A.4: Plant topology 2 with two reactors performing Reaction R1, R2 & R3.

A.3.1 STN Representation in case of Plant Topology 2

The STN Representation of the batch process remains unchaged. Hence plant topology 1 and topology 2 share the same STN representation.

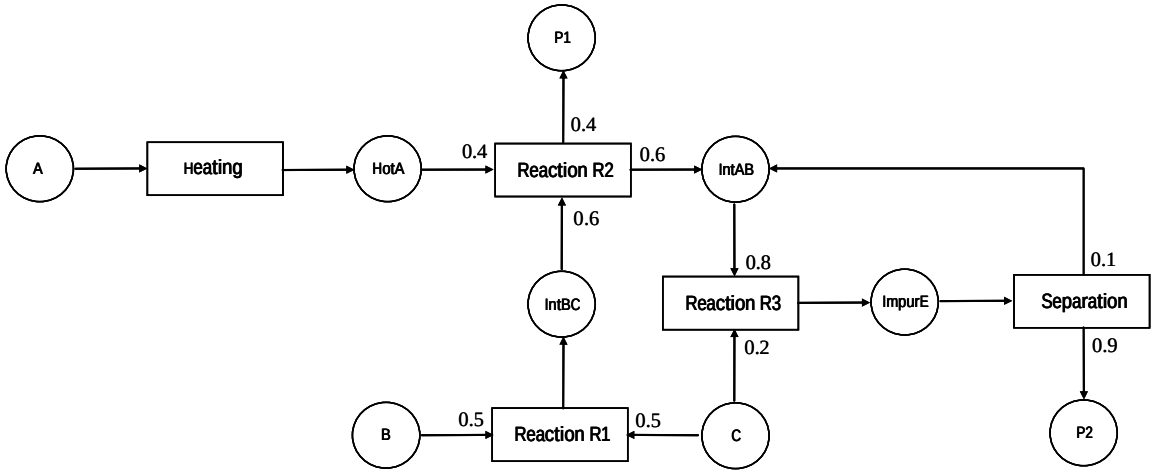

Figure A.5: STN representation of the batch production process in case of plant topology 2

A.3.2 RTN Representation in case of Plant Topology 2

The RTN Representation of the batch process for plant topology 2 is given below:

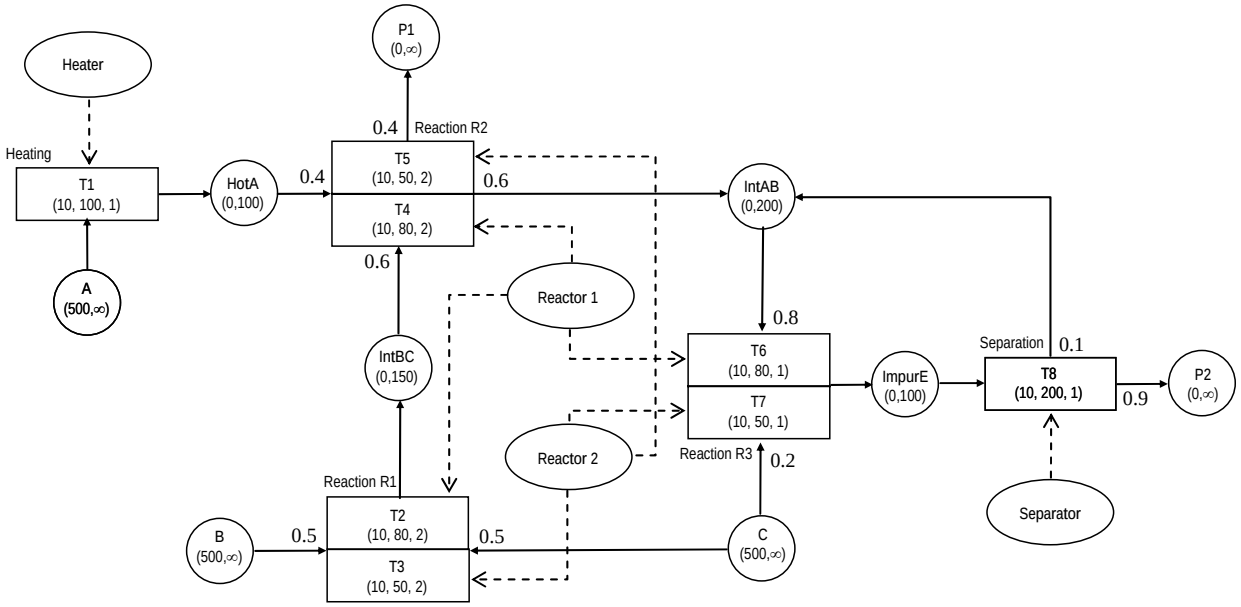

Figure A.6: RTN representation of the batch production process in case of plant topology 2

From this example it is clear that the STN representation ***only displays the product recipe*** and is independent of plant topology. On the other hand the RTN representation is able to ***display both product recipe and plant topology***. Thus, it is quite possible for two different plant topologies to have the same STN representation but different RTN representation.

APPENDIX B

DEVELOPMENT OF ILLUSTRATIVE EXAMPLE USING ERTN FRAMEWORK

The ERTN representation of the illustrative example comprising of batch production plant and associated site utility system has already been briefly discussed in section IV.5 (figure IV-26). This section provides the complete development of the illustrative example.

B.1 DATA ACQUISITION FROM THE ERTN REPRESENTATION

The graphical representation of the ERTN framework provides the complete detail about the process scheduling problem. This data is attained from the following matrixes:

Task nodes

Minimum threshold for each task:

$$V_k^{\min}:\begin{bmatrix} T1 & T2 & T3 & T4 & T5 & T6 & T7 & T8 & T9 & T10 & T11 & T12 & T13 & T14 & T15 & T16 \\ 10 & 10 & 10 & 10 & 10 & 10 & 10 & 10 & 30 & 15 & 10 & 10 & 10 & 10 & 10 & 10 \end{bmatrix}$$

Maximum threshold for each task:

$$V_k^{\max}:\begin{bmatrix} T1 & T2 & T3 & T4 & T5 & T6 & T7 & T8 & T9 & T10 & T11 & T12 & T13 & T14 & T15 & T16 \\ 100 & 100 & 80 & 50 & 100 & 80 & 50 & 200 & 200 & 15 & 200 & 200 & 200 & 200 & 200 & 200 \end{bmatrix}$$

Task durations:

$$p_k:\begin{bmatrix} T1 & T2 & T3 & T4 & T5 & T6 & T7 & T8 & T9 & T10 & T11 & T12 & T13 & T14 & T15 & T16 \\ 1 & 1 & 2 & 2 & 1 & 1 & 1 & 2 & 1 & 1 & 1 & 1 & 1 & 1 & 1 & 1 \end{bmatrix}$$

Delivery time:

$$dd_k:\begin{bmatrix} T1 & T2 & T3 & T4 & T5 & T6 & T7 & T8 & T9 & T10 & T11 & T12 & T13 & T14 & T15 & T16 \\ 1 & 1 & 2 & 2 & 1 & 1 & 1 & 2 & 0 & 0 & 0 & 0 & 0 & 0 & 0 & 0 \end{bmatrix}$$

Resource node

Maximum storage capacity of resources:

$$C_s^{\max}:\begin{bmatrix} S_A & S_{HotA} & S_B & S_{IntAB} & S_{P1} & S_D & S_C & S_{IntBC} & S_{impureP2} & S_{P2} & S_{P3} & S_{Water} & S_{Fuel} & S_{HP} & S_{MP} & S_{IntMP} & S_{LP} & S_{IntLP} & S_{Elec} & S_{Ehst} \\ \infty & 100 & \infty & 500 & \infty & \infty & \infty & 500 & 250 & \infty & \infty & \infty & \infty & 0 & 0 & 0 & 0 & 0 & 0 & 0 \end{bmatrix}$$

Disjunctive resource node:

$PE_{k,j}$:

Heater	Reactor 1	Reactor 2	*Separator*	*Boiler*	*HPRV*	*Turbine* 1	*MPRV*	*Turbine* 2	*Turbine* 3	*Pump*	
1	0	0	0	0	0	0	0	0	0	0	$T1$
0	1	0	0	0	0	0	0	0	0	0	$T2$
0	1	0	0	0	0	0	0	0	0	0	$T3$
0	0	1	0	0	0	0	0	0	0	0	$T4$
0	0	1	0	0	0	0	0	0	0	0	$T5$
0	1	0	0	0	0	0	0	0	0	0	$T6$
0	0	1	0	0	0	0	0	0	0	0	$T7$
0	0	0	1	0	0	0	0	0	0	0	$T8$
0	0	0	0	1	0	0	0	0	0	0	$T9$
0	0	0	0	1	0	0	0	0	0	0	$T10$
0	0	0	0	0	1	0	0	0	0	0	$T11$
0	0	0	0	0	0	1	0	0	0	0	$T12$
0	0	0	0	0	0	0	1	0	0	0	$T13$
0	0	0	0	0	0	0	0	1	0	0	$T14$
0	0	0	0	0	0	0	0	0	1	0	$T15$
0	0	0	0	0	0	0	0	0	0	1	$T16$

Fixed flow arc

Proportions that determine the outputs from the task:

$\rho_{k,s}^{prod}$:

S_A	S_{HotA}	S_B	S_{IntAB}	S_{P1}	S_D	S_C	S_{IntBC}	$S_{impureP2}$	S_{P3}	S_{P2}	S_{Water}	S_{Fuel}	S_{HP}	S_{MP}	S_{IntMP}	S_{LP}	S_{IntLP}	S_{Elec}	S_{Ehst}	
0	1	0	0	0	0	0	0	0	0	0	0	0	0	0	0	0	0	0	0	$T1$
0	0	0	1	0	0	0	0	0	0	0	0	0	0	0	0	0	0	0	0	$T2$
0	0	0	0	1	0	0	0	0	0	0	0	0	0	0	0	0	0	0	0	$T3$
0	0	0	0	1	0	0	0	0	0	0	0	0	0	0	0	0	0	0	0	$T4$
0	0	0	0	0	0	0	0.75	0.25	0	0	0	0	0	0	0	0	0	0	0	$T5$
0	0	0	0.1	0	0	0	0	0	0.9	0	0	0	0	0	0	0	0	0	0	$T6$
0	0	0	0.1	0	0	0	0	0	0.9	0	0	0	0	0	0	0	0	0	0	$T7$
0	0	0.15	0	0	0	0	0	0	0	0.85	0	0	0	0	0	0	0	0	0	$T8$
0	0	0	0	0	0	0	0	0	0	0	0	0	1	0	0	0	0	0	0	$T9$
0	0	0	0	0	0	0	0	0	0	0	1	0	0	0	0	0	0	0	0	$T10$
0	0	0	0	0	0	0	0	0	0	0	0	0	0	1	0	0	0	0	0	$T11$
0	0	0	0	0	0	0	0	0	0	0	0	0	0	0	0	0	0	0	0	$T12$
0	0	0	0	0	0	0	0	0	0	0	0	0	0	0	0	1	0	0	0	$T13$
0	0	0	0	0	0	0	0	0	0	0	0	0	0	0	0	0	0	0	0	$T14$
0	0	0	0	0	0	0	0	0	0	0	0	0	0	0	0	0	0	0	1	$T15$
0	0	0	0	0	0	0	0	0	0	0	1	0	0	0	0	0	0	0	0	$T16$

Proportions that determine the inputs into the task:

$\rho_{k,s}^{cons}$:

S_A	S_{HotA}	S_B	S_{IntAB}	S_{P1}	S_D	S_C	S_{IntBC}	$S_{impureP2}$	S_{P3}	S_{P2}	S_{Water}	S_{Fuel}	S_{HP}	S_{MP}	S_{IntMP}	S_{LP}	S_{IntLP}	S_{Elec}	S_{Ehst}	
1	0	0	0	0	0	0	0	0	0	0	0	0	0	0	0	0	0	0	0	$T1$
0	0.5	0.5	0	0	0	0	0	0	0	0	0	0	0	0	0	0	0	0	0	$T2$
0	0.8	0	0	0	0.2	0	0	0	0	0	0	0	0	0	0	0	0	0	0	$T3$
0	0.8	0	0	0	0.2	0	0	0	0	0	0	0	0	0	0	0	0	0	0	$T4$
0	0	0	0.4	0	0	0.6	0	0	0	0	0	0	0	0	0	0	0	0	0	$T5$
0	0	0	0	0	0.3	0	0.7	0	0	0	0	0	0	0	0	0	0	0	0	$T6$
0	0	0	0	0	0.3	0	0.7	0	0	0	0	0	0	0	0	0	0	0	0	$T7$
0	0	0	0	0	0	0	0	1	0	0	0	0	0	0	0	0	0	0	0	$T8$
0	0	0	0	0	0	0	0	0	0	0	1	0	0	0	0	0	0	0	0	$T9$
0	0	0	0	0	0	0	0	0	0	0	1	0	0	0	0	0	0	0	0	$T10$
0	0	0	0	0	0	0	0	0	0	0	0	0	1	0	0	0	0	0	0	$T11$
0	0	0	0	0	0	0	0	0	0	0	0	0	1	0	0	0	0	0	0	$T12$
0	0	0	0	0	0	0	0	0	0	0	0	0	0	1	0	0	0	0	0	$T13$
0	0	0	0	0	0	0	0	0	0	0	0	0	0	0	1	0	0	0	0	$T14$
0	0	0	0	0	0	0	0	0	0	0	0	0	0	0	0	1	0	0	0	$T15$
0	0	0	0	0	0	0	0	0	0	0	0	0	0	0	0	0	0	0	1	$T16$

Free flow arc

Proportions that allow outputs from the task to be variable:

$\mu_{k,s}^{prod}$:

S_A	S_{HotA}	S_B	S_{IntAB}	S_{P1}	S_D	S_C	S_{IntBC}	$S_{impureP2}$	S_{P3}	S_{P2}	S_{Water}	S_{Fuel}	S_{HP}	S_{MP}	S_{IntMP}	S_{LP}	S_{IntLP}	S_{Elec}	S_{Ehst}	
0	0	0	0	0	0	0	0	0	0	0	0	0	0	0	0	0	0	0	0	$T1$
0	0	0	0	0	0	0	0	0	0	0	0	0	0	0	0	0	0	0	0	$T2$
0	0	0	0	0	0	0	0	0	0	0	0	0	0	0	0	0	0	0	0	$T3$
0	0	0	0	0	0	0	0	0	0	0	0	0	0	0	0	0	0	0	0	$T4$
0	0	0	0	0	0	0	0	0	0	0	0	0	0	0	0	0	0	0	0	$T5$
0	0	0	0	0	0	0	0	0	0	0	0	0	0	0	0	0	0	0	0	$T6$
0	0	0	0	0	0	0	0	0	0	0	0	0	0	0	0	0	0	0	0	$T7$
0	0	0	0	0	0	0	0	0	0	0	0	0	0	0	0	0	0	0	0	$T8$
0	0	0	0	0	0	0	0	0	0	0	0	0	0	0	0	0	0	0	0	$T9$
0	0	0	0	0	0	0	0	0	0	0	0	0	0	0	0	0	0	0	0	$T10$
0	0	0	0	0	0	0	0	0	0	0	0	0	0	0	0	0	0	0	0	$T11$
0	0	0	0	0	0	0	0	0	0	0	0	0	0	1	1	0	0	0	0	$T12$
0	0	0	0	0	0	0	0	0	0	0	0	0	0	0	0	0	0	0	0	$T13$
0	0	0	0	0	0	0	0	0	0	0	0	0	0	0	0	1	1	0	0	$T14$
0	0	0	0	0	0	0	0	0	0	0	0	0	0	0	0	0	0	0	0	$T15$
0	0	0	0	0	0	0	0	0	0	0	0	0	0	0	0	0	0	0	0	$T16$

Proportions that allow inputs into the task to be variable:

$\mu_{k,s}^{cons}$:

S_A	S_{HotA}	S_B	S_{IntAB}	S_{P1}	S_D	S_C	S_{IntBC}	$S_{impureP2}$	S_{P3}	S_{P2}	S_{Water}	S_{Fuel}	S_{HP}	S_{MP}	S_{IntMP}	S_{LP}	S_{IntLP}	S_{Elec}	S_{Ehst}	
0	0	0	0	0	0	0	0	0	0	0	0	0	0	0	0	0	0	0	0	$T1$
0	0	0	0	0	0	0	0	0	0	0	0	0	0	0	0	0	0	0	0	$T2$
0	0	0	0	0	0	0	0	0	0	0	0	0	0	0	0	0	0	0	0	$T3$
0	0	0	0	0	0	0	0	0	0	0	0	0	0	0	0	0	0	0	0	$T4$
0	0	0	0	0	0	0	0	0	0	0	0	0	0	0	0	0	0	0	0	$T5$
0	0	0	0	0	0	0	0	0	0	0	0	0	0	0	0	0	0	0	0	$T6$
0	0	0	0	0	0	0	0	0	0	0	0	0	0	0	0	0	0	0	0	$T7$
0	0	0	0	0	0	0	0	0	0	0	0	0	0	0	0	0	0	0	0	$T8$
0	0	0	0	0	0	0	0	0	0	0	0	0	0	0	0	0	0	0	0	$T9$
0	0	0	0	0	0	0	0	0	0	0	0	0	0	0	0	0	0	0	0	$T10$
0	0	0	0	0	0	0	0	0	0	0	0	0	0	0	0	0	0	0	0	$T11$
0	0	0	0	0	0	0	0	0	0	0	0	0	0	0	0	0	0	0	0	$T12$
0	0	0	0	0	0	0	0	0	0	0	0	0	0	0	0	0	0	0	0	$T13$
0	0	0	0	0	0	0	0	0	0	0	0	0	0	0	0	0	0	0	0	$T14$
0	0	0	0	0	0	0	0	0	0	0	0	0	0	0	0	0	0	0	0	$T15$
0	0	0	0	0	0	0	0	0	0	0	0	0	0	0	0	0	0	0	0	$T16$

utility arc

Fixed component of utility resource consumed by a task:

$ufi_{k,s}$:

S_A	S_{HotA}	S_B	S_{IntAB}	S_{P1}	S_D	S_C	S_{IntBC}	$S_{impureP2}$	S_{P3}	S_{P2}	S_{Water}	S_{Fuel}	S_{HP}	S_{MP}	S_{IntMP}	S_{LP}	S_{IntLP}	S_{Elec}	S_{Ehst}	
0	0	0	0	0	0	0	0	0	0	0	0	0	0	0	0	0	0	0	0	$T1$
0	0	0	0	0	0	0	0	0	0	0	0	0	0	0	0	0	0	0	0	$T2$
0	0	0	0	0	0	0	0	0	0	0	0	0	0	0	0	0	0	0	0	$T3$
0	0	0	0	0	0	0	0	0	0	0	0	0	0	0	0	0	0	0	0	$T4$
0	0	0	0	0	0	0	0	0	0	0	0	0	0	0	0	0	0	0	0	$T5$
0	0	0	0	0	0	0	0	0	0	0	0	0	0	0	0	0	0	0	0	$T6$
0	0	0	0	0	0	0	0	0	0	0	0	0	0	0	0	0	0	0	0	$T7$
0	0	0	0	0	0	0	0	0	0	0	0	0	0	0	0	0	0	0	0	$T8$
0	0	0	0	0	0	0	0	0	0	0	0	0	0	0	0	0	0	0	0	$T9$
0	0	0	0	0	0	0	0	0	0	0	0	2.72	0	0	0	0	0	0	0	$T10$
0	0	0	0	0	0	0	0	0	0	0	0	0	0	0	0	0	0	0	0	$T11$
0	0	0	0	0	0	0	0	0	0	0	0	0	0	0	0	0	0	0	0	$T12$
0	0	0	0	0	0	0	0	0	0	0	0	0	0	0	0	0	0	0	0	$T13$
0	0	0	0	0	0	0	0	0	0	0	0	0	0	0	0	0	0	0	0	$T14$
0	0	0	0	0	0	0	0	0	0	0	0	0	0	0	0	0	0	0.	0	$T15$
0	0	0	0	0	0	0	0	0	0	0	0	0	0	0	0	0	0	0	0	$T16$

Variable component of utility resource consumed by a task:

$uvi_{k,s}$:

S_A	S_{HotA}	S_B	S_{IntAB}	S_{P1}	S_D	S_C	S_{IntBC}	$S_{impureP2}$	S_{P3}	S_{P2}	S_{Water}	S_{Fuel}	S_{HP}	S_{MP}	S_{IntMP}	S_{LP}	S_{IntLP}	S_{Elec}	S_{Ehst}	
0	0	0	0	0	0	0	0	0	0	0	0	0	0.75	0	0	0	0	0	0	$T1$
0	0	0	0	0	0	0	0	0	0	0	0	0	0	0	0	0.25	0	0	0	$T2$
0	0	0	0	0	0	0	0	0	0	0	0	0	0	0	0	0.5	0	0	0	$T3$
0	0	0	0	0	0	0	0	0	0	0	0	0	0	0	0	0.5	0	0	0	$T4$
0	0	0	0	0	0	0	0	0	0	0	0	0	0	0.5	0	0	0	0	0	$T5$
0	0	0	0	0	0	0	0	0	0	0	0	0	0	0.25	0	0	0	10×10^{-3}	0	$T6$
0	0	0	0	0	0	0	0	0	0	0	0	0	0	0.25	0	0	0	10×10^{-3}	0	$T7$
0	0	0	0	0	0	0	0	0	0	0	0	0	0	0	0	0	0	5×10^{-3}	0	$T8$
0	0	0	0	0	0	0	0	0	0	0	0	0	0	0	0	0	0	0	0	$T9$
0	0	0	0	0	0	0	0	0	0	0	0	0	0	0	0	0	0	0	0	$T10$
0	0	0	0	0	0	0	0	0	0	0	0	0	0	0	0	0	0	0	0	$T11$
0	0	0	0	0	0	0	0	0	0	0	0	0	0	0	0	0	0	0	0	$T12$
0	0	0	0	0	0	0	0	0	0	0	0	0	0	0	0	0	0	0	0	$T13$
0	0	0	0	0	0	0	0	0	0	0	0	0	0	0	0	0	0	0	0	$T14$
0	0	0	0	0	0	0	0	0	0	0	0	0	0	0	0	0	0	0	0	$T15$
0	0	0	0	0	0	0	0	0	0	0	0	0	0	0	0	0	0	0.5×10^{-3}	0	$T16$

Fixed component of utility resource produced by a task:

$ufo_{k,s}$:

S_A	S_{HotA}	S_B	S_{IntAB}	S_{P1}	S_D	S_C	S_{IntBC}	$S_{impureP2}$	S_{P3}	S_{P2}	S_{Water}	S_{Fuel}	S_{HP}	S_{MP}	S_{IntMP}	S_{LP}	S_{IntLP}	S_{Elec}	S_{Ehst}	
0	0	0	0	0	0	0	0	0	0	0	0	0	0	0	0	0	0	0	0	$T1$
0	0	0	0	0	0	0	0	0	0	0	0	0	0	0	0	0	0	0	0	$T2$
0	0	0	0	0	0	0	0	0	0	0	0	0	0	0	0	0	0	0	0	$T3$
0	0	0	0	0	0	0	0	0	0	0	0	0	0	0	0	0	0	0	0	$T4$
0	0	0	0	0	0	0	0	0	0	0	0	0	0	0	0	0	0	0	0	$T5$
0	0	0	0	0	0	0	0	0	0	0	0	0	0	0	0	0	0	0	0	$T6$
0	0	0	0	0	0	0	0	0	0	0	0	0	0	0	0	0	0	0	0	$T7$
0	0	0	0	0	0	0	0	0	0	0	0	0	0	0	0	0	0	0	0	$T8$
0	0	0	0	0	0	0	0	0	0	0	0	0	0	0	0	0	0	0	0	$T9$
0	0	0	0	0	0	0	0	0	0	0	0	0	0	0	0	0	0	0	0	$T10$
0	0	0	0	0	0	0	0	0	0	0	0	0	0	0	0	0	0	0	0	$T11$
0	0	0	0	0	0	0	0	0	0	0	0	0	0	0	0	0	0	0	0	$T12$
0	0	0	0	0	0	0	0	0	0	0	0	0	0	0	0	0	0	0	0	$T13$
0	0	0	0	0	0	0	0	0	0	0	0	0	0	0	0	0	0	0	0	$T14$
0	0	0	0	0	0	0	0	0	0	0	0	0	0	0	0	0	0	0.	0	$T15$
0	0	0	0	0	0	0	0	0	0	0	0	0	0	0	0	0	0	0	0	$T16$

Variable component of utility resource produced by a task:

$uvo_{k,s}$:

S_A	S_{HotA}	S_B	S_{IntAB}	S_{P1}	S_D	S_C	S_{IntBC}	$S_{impureP2}$	S_{P3}	S_{P2}	S_{Water}	S_{Fuel}	S_{HP}	S_{MP}	S_{IntMP}	S_{LP}	S_{IntLP}	S_{Elec}	S_{Ehst}	
0	0	0	0	0	0	0	0	0	0	0	0	0	0	0	0	0	0	0	0	$T1$
0	0	0	0	0	0	0	0	0	0	0	0	0	0	0	0	0	0	0	0	$T2$
0	0	0	0	0	0	0	0	0	0	0	0	0	0	0	0	0	0	0	0	$T3$
0	0	0	0	0	0	0	0	0	0	0	0	0	0	0	0	0	0	0	0	$T4$
0	0	0	0	0	0	0	0	0	0	0	0	0	0	0	0	0	0	0	0	$T5$
0	0	0	0	0	0	0	0	0	0	0	0	0	0	0	0	0	0	0	0	$T6$
0	0	0	0	0	0	0	0	0	0	0	0	0	0	0	0	0	0	0	0	$T7$
0	0	0	0	0	0	0	0	0	0	0	0	0	0	0	0	0	0	0	0	$T8$
0	0	0	0	0	0	0	0	0	0	0	0	0	0	0	0	0	0	0	0	$T9$
0	0	0	0	0	0	0	0	0	0	0	0	0	0	0	0	0	0	0	0	$T10$
0	0	0	0	0	0	0	0	0	0	0	0	0	0	0	0	0	0	0	0	$T11$
0	0	0	0	0	0	0	0	0	0	0	0	0	0	0	0	0	0	2.481×10^{-3}	0	$T12$
0	0	0	0	0	0	0	0	0	0	0	0	0	0	0	0	0	0	0	0	$T13$
0	0	0	0	0	0	0	0	0	0	0	0	0	0	0	0	0	0	2.585×10^{-3}	0	$T14$
0	0	0	0	0	0	0	0	0	0	0	0	0	0	0	0	0	0	1.912×10^{-3}.	0	$T15$
0	0	0	0	0	0	0	0	0	0	0	0	0	0	0	0	0	0	0	0	$T16$

B.2 MATHEMATICAL MODEL

This section shows the application of the mathematical model developed in the ERTN framework on the illustrative example. For explanation some of these constraints are expanded below in complete detail while the final results on each resource and task node is given in tables 1 & 2.

Capacity constraints

Storage through cumulative resource node

For all the material and utility resources the following capacity constraint is imposed:

$$0 \le S_{s,t} \le C_s^{\max} \qquad \forall s \in S, \forall t \in 1,..,T \qquad \text{[Eq. IV-1]}$$

Cumulative resource Int BC **(S_{IntBC}):**

In the production plant a cumulative resource can store material as long as it does not exceed the maximum capacity.

$$0 \le S_{IntBC,t} \le 500$$

Cumulative resource MP steam **(S_{MP}):**

In the utility system a cumulative resource can only store raw materials (i.e; water and fuel). The materials such as intermediate and exhaust steam can not be stored.

$$0 \le S_{MP,t} \le 0$$

Processing equipment through task node

For all the tasks the following capacity constraint is imposed:

$$W_{k,t} V_k^{\min} \le B_{k,t} \le W_{k,t} V_k^{\max} \qquad \forall k \in K, \forall t \in 1,..,T \qquad \text{[Eq. IV-2]}$$

Reactor 1 **(j=2):**

In the reactor 1 three tasks (k=2, 3 & 6) can be performed. Hence, the maximum batchsize of the task performed by either one of three tasks T2, T3 and T6 is constrained as follows:

$$W_{2,t} \cdot 10 \le B_{2,t} \le W_{2,t} \cdot 100$$

$$W_{3,t} \cdot 10 \le B_{3,t} \le W_{3,t} \cdot 100$$

$$W_{6,t} \cdot 10 \le B_{6,t} \le W_{6,t} \cdot 100$$

Boiler **(j=5):**

In the boiler two tasks (k=9 & 10) can be performed. Hence, the maximum batchsize of the task performed by either one of two tasks T9 or T10 is constrained as follows:

$$W_{9,t} \cdot 15 \le B_{9,t} \le W_{5,t} \cdot 15$$

$$W_{10,t} \cdot 30 \le B_{10,t} \le W_{10,t} \cdot 200$$

Allocation constraints: Disjunctive resource arc

$$\sum_{k \in K_j} \sum_{\substack{t'=t-p_k+1 \\ t>0}}^{t} W_{k,t'} \le 1 \qquad \forall j \in J, \forall t \in 1,..,T \qquad \text{[Eq. IV-3]}$$

***Reactor 1* (j=2):**

In the reactor 1 three tasks (k=2, 3 & 6) can be performed. Hence, the allocation constraint imposes that at a time interval t at most either one of three tasks T2, T3 and T6 can be performed.

$$\sum_{t'=t}^{t} W_{2,t'} + \sum_{t'=t-1}^{t} W_{3,t'} + \sum_{t'=t}^{t} W_{6,t'} \leq 1$$

***Boiler* (j=5):**

In the boiler two tasks (k=9 & 10) can be performed. Hence, the allocation constraints impose that at a time interval t at most either one of task T9 or T10 can be performed.

$$\sum_{t'=t}^{t} W_{9,t'} + \sum_{t'=t}^{t} W_{10,t'} \leq 1$$

Cumulative Resource Mass Balance

(a) Mass Balance:

For all the material and utility resources the mass balance is based on the equation IV-4.

$$S_{s,t} = S_{s,t-1} + \sum_{k \in K} O_{s,k,t-dd_{s,k}} - \sum_{k \in K} I_{s,k,t} + \sum_{k \in K} UO_{s,k,t-dd_{s,k}} - \sum_{k \in K} UI_{s,k,t} + In_{s,t} - Out_{s,t} \qquad \forall s \in S, \forall t \in 1,..,T \quad \text{[Eq. IV-4]}$$

Cumulative resource IntAB :

$$\begin{aligned}
S_{s_{IntAB},t} = {} & S_{s_{IntAB},t-1} + O_{sI_{ntAB},1,t-1} + O_{s_{IntAB},2,t-1} + O_{s_{IntAB},3,t-2} + O_{s_{IntAB},4,t-2} + O_{s_{IntAB},5,t-1} + O_{s_{IntAB},6,t-1} + O_{s_{IntAB},7,t-1} + O_{s_{IntAB},8,t-2} \\
& + O_{s_{IntAB},9,t-1} + O_{s_{IntAB},10,t-1} + O_{s_{IntAB},11,t-1} + O_{s_{IntAB},12,t-1} + O_{s_{IntAB},13,t-1} + O_{s_{IntAB},14,t-1} + O_{s_{IntAB},15,t-1} + O_{s_{IntAB},16,t-1} \\
& + I_{s_{IntAB},1,t} + I_{s_{IntAB},2,t} + I_{s_{IntAB},3,t} + I_{s_{IntAB},4,t} + I_{s_{IntAB},5,t} + I_{s_{IntAB},6,t} + O_{s_{IntAB},7,t} + I_{s_{IntAB},8,t} + I_{s_{IntAB},9,t} + I_{s_{IntAB},10,t} \\
& + I_{s_{IntAB},11,t} + I_{s_{IntAB},12,t} + I_{s_{IntAB},13,t} + I_{s_{IntAB},14,t} + I_{s_{IntAB},15,t} + I_{s_{IntAB},16,t} + UO_{s_{IntAB},1,t-1} + UO_{s_{IntAB},2,t-1} \\
& + UO_{s_{IntABP},3,t-2} + UO_{s_{IntAB},4,t-2} + UO_{s_{IntAB},5,t-1} + UO_{s_{IntAB},6,t-1} + UO_{s_{IntAB},7,t-1} + UO_{s_{IntAB},8,t-8} + UO_{s_{IntAB},9,t-1} \\
& + UO_{s_{IntAB},10,t-1} + UO_{s_{IntABP},11,t-1} + UO_{s_{IntAB},12,t-1} + UO_{s_{IntAB},13,t-1} + UO_{s_{IntAB},14,t-1} + UO_{s_{IntAB},15,t-1} + UO_{s_{IntAB},16,t-1} \\
& + I_{s_{IntAB},1,t} + I_{s_{IntAB},2,t} + I_{s_{IntAB},3,t} + I_{s_{IntAB},4,t} + I_{s_{IntAB},5,t} + I_{s_{IntAB},6,t} + O_{s_{IntAB},7,t} + I_{s_{IntAB},8,t} + I_{s_{IntAB},9,t} + I_{s_{IntAB},10,t} \\
& + I_{s_{IntAB},11,t} + I_{s_{IntAB},12,t} + I_{s_{IntAB},13,t} + I_{s_{IntAB},14,t} + I_{s_{IntAB},15,t} + I_{s_{IntAB},16,t} + In_{s_{IntAB},t} + Out_{s_{IntAB},t}
\end{aligned}$$

$$\begin{aligned}
S_{s_{IntAB},t} = {} & S_{s_{IntAB},t-1} + 0 + O_{s_{IntAB},2,t-1} + 0 + 0 + 0 + 0 + 0 + O_{s_{IntAB},8,t-8} + 0 + 0 + 0 + 0 + 0 + 0 + 0 + 0 + 0 + 0 + 0 + 0 \\
& + I_{s_{IntAB},5,t} + 0 + 0 + 0 + 0 + 0 + 0 + 0 + 0 + 0 + 0 + 0 + 0 + 0 + 0 + 0 + 0 + 0 + 0 + 0 + 0 + 0 + 0 + 0 + 0 + 0 \\
& + 0 + 0 + 0 + 0 + 0 + 0 + 0 + 0 + 0 + 0 + 0 + 0 + 0 + 0 + 0 + 0 + 0 + 0 + In_{s_{IntAB},t} + Out_{s_{IntAB},t}
\end{aligned}$$

$$S_{s_{IntAB},t} = S_{s_{IntAB},t-1} + O_{s_{IntAB},2,t-1} + O_{s_{IntAB},8,t-8} + I_{s_{IntAB},5,t} + In_{s_{IntAB},t} + Out_{s_{IntAB},t}$$

Cumulative resource MP :

$$S_{s_{MP},t} = S_{s_{MP},t-1} + O_{s_{MP},1,t-1} + O_{s_{MP},2,t-1} + O_{s_{MP},3,t-2} + O_{s_{MP},4,t-2} + O_{s_{MP},5,t-1} + O_{s_{MP},6,t-1} + O_{s_{MP},7,t-1} + O_{s_{MP},8,t-8}$$
$$+ O_{s_{MP},9,t-1} + O_{s_{MP},10,t-1} + O_{s_{MP},11,t-1} + O_{s_{MP},12,t-1} + O_{s_{MP},13,t-1} + O_{s_{MP},14,t-1} + O_{s_{MP},15,t-1} + O_{s_{MP},16,t-1} + I_{s_{MP},1,t}$$
$$+ I_{s_{MP},2,t} + I_{s_{MP},3,t} + I_{s_{MP},4,t} + I_{s_{MP},5,t} + I_{s_{MP},6,t} + O_{s_{MP},7,t} + I_{s_{MP},8,t} + I_{s_{MP},9,t} + I_{s_{MP},10,t} + I_{s_{MP},11,t} + I_{s_{MP},12,t}$$
$$+ I_{s_{MP},13,t} + I_{s_{MP},14,t} + I_{s_{MP},15,t} + I_{s_{MP},16,t} + UO_{s_{MP},1,t-1} + UO_{s_{MP},2,t-1} + UO_{s_{MP},3,t-2} + UO_{s_{MP},4,t-2} + UO_{s_{MP},5,t-1}$$
$$+ UO_{s_{MP},6,t-1} + UO_{s_{MP},7,t-1} + UO_{s_{MP},8,t-8} + UO_{s_{MP},9,t-1} + UO_{s_{MP},10,t-1} + UO_{s_{MP},11,t-1} + UO_{s_{MP},12,t-1} + UO_{s_{MP},13,t-1}$$
$$+ UO_{s_{MP},14,t-1} + UO_{s_{MP},15,t-1} + UO_{s_{MP},16,t-1} + I_{s_{MP},1,t} + I_{s_{MP},2,t} + I_{s_{MP},3,t} + I_{s_{MP},4,t} + I_{s_{MP},5,t} + I_{s_{MP},6,t} + O_{s_{MP},7,t}$$
$$+ I_{s_{MP},8,t} + I_{s_{MP},9,t} + I_{s_{MP},10,t} + I_{s_{MP},11,t} + I_{s_{MP},12,t} + I_{s_{MP},13,t} + I_{s_{MP},14,t} + I_{s_{MP},15,t} + I_{s_{MP},16,t} + In_{s_{MP},t} + Out_{s_{MP},t}$$

$$S_{s_{MP},t} = S_{s_{MP},t-1} + 0 + 0 + 0 + 0 + 0 + 0 + 0 + 0 + 0 + 0 + O_{s_{MP},11,t-1} + O_{s_{MP},12,t-1} + 0 + 0 + 0 + 0 + 0 + 0 + 0 + 0$$
$$+ 0 + 0 + 0 + 0 + 0 + 0 + 0 + 0 + I_{s_{MP},13,t} + 0 + 0 + 0 + 0 + 0 + 0 + 0 + 0 + 0 + 0 + 0 + 0 + 0 + 0 + 0 + 0 + 0 + 0$$
$$+ 0 + 0 + 0 + 0 + 0 + 0 + UI_{s_{MP},5,t} + UI_{s_{MP},6,t} + UI_{s_{MP},7,t} + 0 + 0 + 0 + 0 + 0 + 0 + 0 + 0 + 0 + In_{s_{MP},t} + Out_{s_{MP},t}$$

$$S_{s_{MP},t} = S_{s_{MP},t-1} + O_{s_{MP},11,t-1} + O_{s_{MP},12,t-1} + I_{s_{MP},13,t} + UI_{s_{MP},5,t} + UI_{s_{MP},6,t} + UI_{s_{MP},7,t} + In_{s_{MP},t} + Out_{s_{MP},t}$$

(b) Initial quantity of resources:

$$S_{s,0} = S0^{\max} \qquad \forall s \in S \qquad \text{[Eq. IV-5]}$$

These initial quantities available in each cumulative resource node is assumed to be known at the start of scheduling horizon, i.e. at time interval $t = 0$. The detail for each resource is as follows:

$$S0_s : \begin{bmatrix} S_A & S_{HotA} & S_B & S_{IntAB} & S_{P1} & S_D & S_C & S_{IntBC} & S_{impureP2} & S_{P2} & S_{P3} & S_{Water} & S_{Fuel} & S_{HP} & S_{MP} & S_{IntMP} & S_{LP} & S_{IntLP} & S_{Elec} & S_{Ehst} \\ 1000 & 0 & 1000 & 0 & 0 & 1000 & 1000 & 0 & 0 & 0 & 0 & 10000 & 10000 & 0 & 0 & 0 & 0 & 0 & 0 & 0 \end{bmatrix}$$

(c) Demand satisfaction constraints:

$$Out_{s,T} = D_s \qquad \forall s \in S \qquad \text{[Eq. IV-6]}$$

The demand of the finished product P1, P2 and P3 at the end of time horizon (T=24) is 250, 250 and 100 kilograms respectively.

$$D_s : \begin{bmatrix} S_A & S_{HotA} & S_B & S_{IntAB} & S_{P1} & S_D & S_C & S_{IntBC} & S_{impureP2} & S_{P2} & S_{P3} & S_{Water} & S_{Fuel} & S_{HP} & S_{MP} & S_{IntMP} & S_{LP} & S_{IntLP} & S_{Elec} & S_{Ehst} \\ 0 & 0 & 0 & 0 & 250 & 0 & 0 & 0 & 0 & 250 & 100 & 0 & 0 & 0 & 0 & 0 & 0 & 0 & 0 & 0 \end{bmatrix}$$

(d) Bounds on the imports and exports of resources:

$$Out_{s,t} \le Out_s^{\max} \qquad \forall s \in S \qquad \text{[Eq. IV-7]}$$

It is assumed that the only export from the industrial unit to the environment (market) is of the finished products P1, P2 and P3.

$$Out_{s,t} : \begin{bmatrix} S_A & S_{HotA} & S_B & S_{IntAB} & S_{P1} & S_D & S_C & S_{IntBC} & S_{impureP2} & S_{P2} & S_{P3} & S_{Water} & S_{Fuel} & S_{HP} & S_{MP} & S_{IntMP} & S_{LP} & S_{IntLP} & S_{Elec} & S_{Ehst} \\ 0 & 0 & 0 & 0 & 500 & 0 & 0 & 0 & 0 & 500 & 500 & 0 & 0 & 0 & 0 & 0 & 0 & 0 & 0 & 0 \end{bmatrix}$$

It is assumed that the only import from the industrial unit to the environment (market) is of the electricity.

$$In_{s,t} \le In_s^{\max} \qquad \forall s \in S \qquad \text{[Eq. IV-8]}$$

$$In_{s,t} : \begin{bmatrix} S_A & S_{HotA} & S_B & S_{IntAB} & S_{P1} & S_D & S_C & S_{IntBC} & S_{impureP2} & S_{P2} & S_{P3} & S_{Water} & S_{Fuel} & S_{HP} & S_{MP} & S_{IntMP} & S_{LP} & S_{IntLP} & S_{Elec} & S_{Ehst} \\ 0 & 0 & 0 & 0 & 500 & 0 & 0 & 0 & 0 & 500 & 500 & 0 & 0 & 0 & 0 & 0 & 0 & 0 & 0 & 0 \end{bmatrix}$$

Task Mass Balances

(a) Mass balance:

$$B_{k,t} = \sum_{s \in S_k^{prod}} O_{s,k,t} = \sum_{s \in S_k^{cons}} I_{s,k,t} \qquad \forall k \in K, \forall t \in 1,..,T \qquad \text{[Eq. IV-9]}$$

Potentially a task might receive and provide materials to all the cumulative resources. In that case, equation IV-9 will have the following form:

$$B_{k,t} = O_{s_A,k,t} + O_{s_{HotA},k,t} + O_{s_B,k,t} + O_{s_{IntAB},k,t} + O_{s_{P1},k,t} + O_{s_D,k,t} + O_{s_C,k,t} + O_{s_{IntBC},k,t} + O_{s_{impureP2},k,t} + O_{s_{P2},k,t} + O_{s_{P3},k,t} + O_{s_{Water},k,t} + O_{s_{Fuel},k,t} + O_{s_{HP},k,t} + O_{s_{MP},k,t} + O_{s_{IntMP},k,t} + O_{s_{LP},k,t} + O_{s_{IntLP},k,t} + O_{s_{Elec},k,t} + O_{s_{Ehst},k,t}$$

$$B_{k,t} = I_{s_A,k,t} + I_{s_{HotA},k,t} + I_{s_B,k,t} + I_{s_{IntAB},k,t} + I_{s_{P1},k,t} + I_{s_D,k,t} + I_{s_C,k,t} + I_{s_{IntBC},k,t} + I_{s_{impureP2},k,t} + I_{s_{P2},k,t} + I_{s_{P3},k,t} + I_{s_{Water},k,t} + I_{s_{Fuel},k,t} + I_{s_{HP},k,t} + I_{s_{MP},k,t} + I_{s_{IntMP},k,t} + I_{s_{LP},k,t} + I_{s_{IntLP},k,t} + I_{s_{Elec},k,t} + I_{s_{Ehst},k,t}$$

However, a task *k* generally receives input from and gives output into a select few cumulative resources (based on the recipe) thereby reducing the size of the equation IV-9. For example consider task 6 and task 12.

Task 6 (i=6 & j=2):

The reaction 3 performed in Reactor *1* receives input from cumulative resource S_D and S_{IntBC} and gives output into cumulative resource S_{P3} and S_{IntAB}. Thus, mass balance equation is reduced to:

$$B_{6,t} = O_{s_{P3},6,t} + O_{s_{IntAB},6,t}$$
$$= I_{s_{IntBC},6,t} + I_{s_D,6,t}$$

Task 12 (i=12 & j=7):

Similarly, the steam expansion process through turbine receives input from cumulative resource S_{HP} and gives output into cumulative resource S_{MP} and S_{IntMP}. Thus, mass balance equation is reduced to

$$B_{12,t} = O_{s_{MP},12,t} + O_{s_{IntMP},12,t}$$
$$= I_{s_{HP},11,t}$$

(b) Determining the output from a task:

Equation IV-10 and IV-11 jointly determine the fixed the proportion of output from a task with respect to the batchsize.

$$O_{s,k,t} \le \left(\rho_{k,s}^{prod} + \mu_{k,s}^{prod}\right) B_{k,t} \qquad \forall k \in K, \forall s \in S_k^{prod}, \forall t \in 1,..,T \qquad \text{[Eq.IV-10]}$$

$$O_{s,k,t} \ge \rho_{k,s}^{prod} B_{k,t} \qquad \forall k \in K, \forall s \in S_k^{prod}, \forall t \in 1,..,T \qquad \text{[Eq.IV-11]}$$

Task 6 (i=6 & j=2):

The reaction 3 performed in Reactor *1* gives output into cumulative resource S_{P3} and S_{IntAB}. For the cumulative resource S_{P3} the applications of equation IV-10 and IV-11 leads to the following result:

$$O_{s_{P3},6,t} \le B_{6,t} \cdot \left(\rho_{6,S_{P3}}^{prod} + \mu_{6,S_{P3}}^{prod}\right)$$

$$O_{s_{P3},6,t} \ge B_{6,t} \cdot \rho_{6,S_{P3}}^{prod}$$

$$\rho_{6,S_{P3}}^{prod} = 0.9 \quad and \quad \mu_{6,S_{P3}}^{prod} = 0$$

Thus, effectively leading to the result

$$O_{s_{P3},6,t} \le B_{6,t} \cdot (0.9 + 0)$$

$$O_{s_{P3},6,t} \ge B_{6,t} \cdot 0.9$$

$$O_{s_{P3},6,t} = 0.9 \cdot B_{6,t}$$

Similarly, the applications of equation IV-10 and IV-11 on cumulative resource S_{IntAB} leads to the following result:

$$O_{s_{IntAB},6,t} = 0.1 \cdot B_{6,t}$$

Task 12 (i=12 & j=7):

The steam expansion process through turbine gives output into cumulative resource S_{MP} and S_{IntMP}. For the cumulative resource S_{MP} the application of equation IV-10 and IV-11 leads to the following result:

$$O_{s_{MP},12,t} \le B_{12,t} \cdot \left(\rho^{prod}_{12,S_{MP}} + \mu^{prod}_{6,S_{MP}}\right)$$

$$O_{s_{P3},6,t} \ge B_{6,t} \cdot \rho^{prod}_{6,S_{P3}}$$

$$\rho^{prod}_{6,S_{MP}} = 0 \quad and \quad \mu^{prod}_{6,S_{MP}} = 1$$

Thus, effectively leading to the result

$$O_{s_{MP},12,t} \le B_{12,t} \cdot (0+1)$$

$$O_{s_{MP},12,t} \ge B_{12,t} \cdot 0$$

$$0 \le O_{s_{MP},12,t} \le B_{12,t}$$

Similarly, the applications of equation IV-10 and IV-11 on cumulative resource S_{IntMP} leads to the following result:

$$0 \le O_{s_{IntMP},12,t} \le B_{12,t}$$

(c) Determining the input into a task :

$$I_{s,k,t} \le \left(\rho^{cons}_{k,s} + \mu^{cons}_{k,s}\right) B_{k,t} \qquad \forall k \in K, \forall s \in S^{cons}_k, \forall t \in 1,..,T \qquad \text{[Eq.IV-12]}$$

$$I_{s,k,t} \ge \rho^{cons}_{k,s}\ B_{k,t} \qquad \forall k \in K, \forall s \in S^{cons}_k, \forall t \in 1,..,T \qquad \text{[Eq.IV-13]}$$

Task 6 (k=6 & j=2):

The reaction 3performed in Reactor *1* receives input from cumulative resource S_D and S_{IntBC}. For the cumulative resource S_D the applications of equation IV-12 and IV-13 leads to the following result:

$$I_{s_D,6,t} \le B_{6,t} \cdot \left(\rho^{prod}_{6,S_D} + \mu^{prod}_{6,S_D}\right)$$

$$I_{s_{P3},6,t} \ge B_{6,t} \cdot \rho^{prod}_{6,S_D}$$

$$\rho^{prod}_{6,S_D} = 0.3 \quad and \quad \mu^{prod}_{6,S_D} = 0$$

Thus, effectively leading to the result

$$I_{s_D,6,t} \le B_{6,t} \cdot (0.3+0)$$

$$I_{s_D,6,t} \ge B_{6,t} \cdot 0.3$$

$$I_{s_D,6,t} = 0.3 \cdot B_{6,t}$$

Similarly, the applications of equation IV-12 and IV-13 on cumulative resource S_{IntBC} leads to the following result:

$$I_{s_{IntBC},6,t} = 0.7 \cdot B_{6,t}$$

Task 12 (k=12 & j=7):

The steam expansion process through turbine receives input from cumulative resource S_{HP}. For the cumulative resource S_{HP} the application of equation IV-12 and IV-13leads to the following result:

$$I_{s_{HP},12,t} \le B_{12,t} \cdot \left(\rho^{prod}_{12,S_{HP}} + \mu^{prod}_{6,S_{HP}}\right)$$

$$I_{s_{HP},12,t} \ge B_{12,t} \cdot \rho^{prod}_{12,S_{HP}}$$

$$\rho^{prod}_{12,S_{HP}} = 1 \quad and \quad \mu^{prod}_{12,S_{HP}} = 0$$

Thus, effectively leading to the result

$$I_{s_{HP},12,t} \le B_{12,t} \cdot (1+0)$$

$$I_{s_{HP},12,t} \ge B_{12,t} \cdot 1$$

$$I_{s_{HP},12,t} = B_{12,t}$$

Consumption / Production of cumulative Utility Resource.

Consumption of utility resource

$$UI_{s,k,t} = uf_{k,s} W_{k,t} + uvi_{k,s} \sum_{t'=t-p_k+1}^{t} B_{k,t'} \quad \forall s \in S, \forall k \in K, \forall t \in 1..T \qquad \text{[Eq.IV-14]}$$

Task 6 (k=6 & j=2):

The reaction 3 performed in Reactor *1* receives two subset of utilities from cumulative utility resource S_{MP} and S_{Elec}. The application of equation IV-14 leads to the following result:

$$UI_{s_{MP},6,t} = uf_{6,s_{MP}} W_{6,t} + uvi_{6,s_{MP}} \cdot \sum_{t'=t-1}^{t} B_{6,t'}$$

$$UI_{s_{MP},6,t} = 0 \cdot W_{6,t} + 0.25 \cdot \sum_{t'=t-1}^{t} B_{6,t'}$$

$$UI_{s_{Elec},6,t} = uf_{6,s_{Elec}} W_{6,t} + uvi_{6,s_{Elec}} \cdot \sum_{t'=t-1}^{t} B_{6,t'}$$

$$UI_{s_{Elec},6,t} = 0 \cdot W_{6,t} + 0.005 \cdot \sum_{t'=t-1}^{t} B_{6,t'}$$

Task 16 (k=16 & j=11):

The exhaust from the turbine stage 3 can be redirected back into water storage resource using the processing equipment pump. The electricity needed for the functioning of the pump is provided by the cumulative utility resource S_{Elec}.

$$UI_{s_{Elec},16,t} = uf_{16,s_{Elec}} W_{16,t} + uvi_{16,s_{Elec}} \cdot \sum_{t'=t}^{t} B_{16,t'}$$

$$UI_{s_{Elec},16,t} = 0 \cdot W_{6,t} + 0.005 \cdot \sum_{t'=t}^{t} B_{16,t'}$$

$$UI_{s_{Elec},16,t} = 0.005 \cdot \sum_{t'=t}^{t} B_{16,t'}$$

Production of utility resource

$$UO_{s,k,t} = uf_{k,s} W_{k,t} + uvo_{k,s} \sum_{t'=t-p_k+1}^{t} B_{k,t''} \quad \forall s \in S, \forall k \in K, \forall t \in 1..T \qquad \text{[Eq.IV-15]}$$

Task 12 (k=12 & j=2):

The steam expansion in turbine not only reduces the steam pressure but also produces electricity. The amount of electricity produced is given by applying equation IV-15:

$$U0_{s_{Elec},12,t} = uf_{12,s_{Elec}} W_{12,t} + uvo_{12,s_{Elec}} \cdot \sum_{t'=t}^{t} B_{12,t'}$$

$$U0_{s_{MP},6,t} = 0 \cdot W_{6,t} + 0.02481 \cdot \sum_{t'=t}^{t} B_{12,t'}$$

$$U0_{s_{MP},6,t} = 0.024'81 \cdot \sum_{t'=t}^{t} B_{12,t'}$$

Modeling of multi-mode equipment

$$W_{k,t+1} \le W_{k,t} + \left(1 - W_{k,t-1}\right) \qquad \forall j \in J^{rstrt}, \forall k \in K_j^{op}, \forall t \in 2,..,T-1 \qquad \text{[Eq.IV-16]}$$

$$W_{k',t} \ge W_{k,t+1} - W_{k,t} \qquad \forall j \in J^{rstrt}, \forall k \in K_j^{op}, \forall k' \in K_j^{rstrt}, \forall t \in 2,..,T-1 \qquad \text{[Eq.IV-17]}$$

$$W_{k',t} \le W_{k,t+1} \qquad \forall j \in J^{rstrt}, \forall k \in K_j^{op}, \forall k' \in K_j^{rstrt}, \forall t \in 2,..,T-1 \qquad \text{[Eq.IV-18]}$$

There is only single multi-mode equipment in the illustrative example, i.e., a boiler. Moreover the multi-mode behavior of the boiler is represented by normal task (T9) and restart task (T10). Hence the boiler tasks can be written down as:

$$where \quad K^{op} = k = 10 \quad and \quad K^{rstrt} = k = 9$$

$$W_{10,t+1} \le W_{10,t} + \left(1 - W_{10,t-1}\right)$$

$$W_{9,t} \ge W_{9,t+1} - W_{9,t}$$

$$W_{9,t} \le W_{9,t+1}$$

Tabular Compilation of all Constraints of the illustrative example

The table Appendix B.1 and table Appendix B.2 compile all the constraints on each resource and task node of the illustrative example.

Table Appendix B.1: Results for all task nodes

	Allocation constraints	Capacity constraints	Mass balances around tasks		
	$\sum_{k\in K_j}\sum_{\substack{t'=t-p_k+1\\ t>0}}^{t} W_{k,t'} \le 1$	$W_{k,t}V_k^{\min} \le B_{k,t} \le W_{k,t}V_k^{\max}$	$B_{k,t} = \sum_{s\in S_k^{prod}} O_{s,k,t} = \sum_{s\in S_k^{cons}} I_{s,k,t}$	$O_{s,k,t} \le \left(\rho_{k,s}^{prod} + \mu_{k,s}^{prod}\right)B_{k,t}$ $O_{s,k,t} \ge \rho_{k,s}^{prod} B_{k,t}$	$I_{s,k,t} \le \left(\rho_{k,s}^{cons} + \mu_{k,s}^{cons}\right)B_{k,t}$ $I_{s,k,t} \ge \rho_{k,s}^{cons} B_{k,t}$
Heater (k=1)	$\sum_{t'=t}^{t} W_{1,t'} \le 1$	$W_{1,t}\cdot 10 \le B_{1,t} \le W_{1,t}\cdot 100$	$B_{1,t} = O_{s_{HeatA},1,t} = I_{s_A,1,t}$	$O_{s_{HeatA},1,t} = B_{1,t}$	$I_{s_A,1,t} = B_{1,t}$
Reactor 1 (k=2, 3 & 6)	$\sum_{t'=t}^{t} W_{2,t'} + \sum_{t'=t-1}^{t} W_{3,t'} + \sum_{t'=t-1}^{t} W_{6,t'} \le 1$	$W_{2,t}\cdot 10 \le B_{2,t} \le W_{2,t}\cdot 100$ $W_{3,t}\cdot 10 \le B_{3,t} \le W_{3,t}\cdot 100$ $W_{6,t}\cdot 10 \le B_{6,t} \le W_{6,t}\cdot 100$	$B_{2,t} = O_{s_{InstAB},2,t} = I_{s_{HeatA},2,t} + I_{s_B,2,t}$ $B_{3,t} = O_{s_{P1},3,t} = I_{s_{HeatA},3,t} + I_{s_D,3,t}$ $B_{6,t} = O_{s_{P3},6,t} + O_{s_{InstAB},6,t} = I_{s_{InstBC},6,t} + I_{s_D,6,t}$	$O_{s_{InstAB},2,t} = B_{2,t}$ $O_{s_{P1},3,t} = B_{3,t}$ $O_{s_{P3},6,t} = 0.9\cdot B_{6,t}$ $O_{s_{InstAB},6,t} = 0.1\cdot B_{6,t}$	$I_{s_{HeatA},2,t} = 0.5\cdot B_{2,t}$ $I_{s_B,2,t} = 0.5\cdot B_{2,t}$ $I_{s_{HeatA},3,t} = 0.8\cdot B_{3,t}$ $I_{s_D,3,t} = 0.2\cdot B_{3,t}$ $I_{s_{InstBC},6,t} = 0.7\cdot B_{6,t}$ $I_{s_D,6,t} = 0.3\cdot B_{6,t}$
Reactor 2 (k=4, 5 & 7)	$\sum_{t'=t}^{t} W_{4,t'} + \sum_{t'=t-1}^{t} W_{5,t'} + \sum_{t'=t-1}^{t} W_{7,t'} \le 1$	$W_{4,t}\cdot 10 \le B_{4,t} \le W_{4,t}\cdot 100$ $W_{5,t}\cdot 10 \le B_{5,t} \le W_{5,t}\cdot 100$ $W_{7,t}\cdot 10 \le B_{7,t} \le W_{7,t}\cdot 100$	$B_{4,t} = O_{s_{P1},4,t} = I_{s_{HeatA},4,t} + I_{s_D,4,t}$ $B_{5,t} = O_{s_{InstBC},5,t} + O_{s_{impurityP2},5,t} = I_{s_C,5,t} + I_{s_{InstAB},5,t}$ $B_{7,t} = O_{s_{P3},7,t} + O_{s_{InstAB},7,t} = I_{s_{InstBC},7,t} + I_{s_D,7,t}$	$O_{s_{P1},4,t} = B_{4,t}$ $O_{s_{InstBC},5,t} = 0.75\cdot B_{5,t}$ $O_{s_{impurityP2},5,t} = 0.25\cdot B_{5,t}$ $O_{s_{P3},7,t} = 0.9\cdot B_{7,t}$ $O_{s_{InstAB},7,t} = 0.1\cdot B_{7,t}$	$I_{s_{HeatA},4,t} = 0.8\cdot B_{4,t}$ $I_{s_D,4,t} = 0.2\cdot B_{4,t}$ $I_{s_C,5,t} = 0.6\cdot B_{5,t}$ $I_{s_{InstAB},5,t} = 0.4\cdot B_{5,t}$ $I_{s_{InstBC},7,t} = 0.7\cdot B_{7,t}$ $I_{s_D,7,t} = 0.3\cdot B_{7,t}$
Separator (k=8)	$\sum_{t'=t}^{t} W_{8,t'} \le 1$	$W_{8,t}\cdot 10 \le B_{8,t} \le W_{8,t}\cdot 200$	$B_{8,t} = O_{s_{P2},8,t} + O_{s_B,8,t} = I_{s_{impurityP2},8,t}$	$O_{s_{P2},8,t} = 0.85\cdot B_{8,t}$ $O_{s_B,8,t} = 0.15\cdot B_{8,t}$	$I_{s_{impurityP2},8,t} = B_{8,t}$
Boiler (k=9 & 10)	$\sum_{t'=t}^{t} W_{9,t'} + \sum_{t'=t}^{t} W_{10,t'} \le 1$	$W_{9,t}\cdot 15 \le B_{9,t} \le W_{5,t}\cdot 15$ $W_{10,t}\cdot 30 \le B_{10,t} \le W_{10,t}\cdot 200$	$B_{9,t} = O_{s_{HP},9,t} = I_{s_{Water},9,t}$ $B_{10,t} = O_{s_{Water},10,t} = I_{s_{Water},10,t}$	$O_{s_{HP},9,t} = B_{9,t}$ $O_{s_{Water},10,t} = B_{10,t}$	$I_{s_{Water},9,t} = B_{9,t}$ $I_{s_{Water},10,t} = B_{10,t}$
HPRV (k=11)	$\sum_{t'=t}^{t} W_{11,t'} \le 1$	$0 \le B_{11,t} \le W_{11,t}\cdot 200$	$B_{11,t} = O_{s_{MP},11,t} = I_{s_{HP},11,t}$	$O_{s_{MP},11,t} = B_{11,t}$	$I_{s_{HP},11,t} = B_{11,t}$
Turbine stage 1 (k=12)	$\sum_{t'=t}^{t} W_{12,t'} \le 1$	$W_{12,t}\cdot 10 \le B_{12,t} \le W_{12,t}\cdot 200$	$B_{12,t} = O_{s_{MP},12,t} + O_{s_{InstMP},12,t} = I_{s_{HP},11,t}$	$0 \le O_{s_{MP},12,t} \le B_{12,t}$ $0 \le O_{s_{InstMP},12,t} \le B_{12,t}$	$I_{s_{HP},11,t} = B_{12,t}$
MPRV (k=13)	$\sum_{t'=t}^{t} W_{13,t'} \le 1$	$0 \le B_{13,t} \le W_{13,t}\cdot 200$	$B_{13,t} = O_{s_{LP},13,t} = I_{s_{MP},13,t}$	$O_{s_{LP},13,t} = B_{13,t}$	$I_{s_{MP},13,t} = B_{13,t}$
Turbine stage 2 (k=14)	$\sum_{t'=t}^{t} W_{14,t'} \le 1$	$W_{14,t}\cdot 10 \le B_{14,t} \le W_{14,t}\cdot 200$	$B_{14,t} = O_{s_{LP},14,t} + O_{s_{InstLP},14,t} = I_{s_{InstMP},14,t}$	$0 \le O_{s_{InstLP},14,t} \le B_{14,t}$ $0 \le O_{s_{LP},14,t} \le B_{14,t}$	$I_{s_{InstMP},14,t} = B_{14,t}$
Turbine stage 3 (k=15)	$\sum_{t'=t}^{t} W_{15,t'} \le 1$	$W_{15,t}\cdot 10 \le B_{15,t} \le W_{15,t}\cdot 200$	$B_{15,t} = O_{s_{Exhst},15,t} = I_{s_{InstLP},15,t}$	$O_{s_{Exhst},15,t} = B_{15,t}$	$I_{s_{InstLP},15,t} = B_{15,t}$
Pump (k=16)	$\sum_{t'=t}^{t} W_{16,t'} \le 1$	$W_{16,t}\cdot 10 \le B_{16,t} \le W_{16,t}\cdot 200$	$B_{16,t} = O_{s_{Water},16,t} = I_{s_{Exhst},16,t}$	$O_{s_{Water},16,t} = B_{16,t}$	$I_{s_{Exhst},16,t} = B_{16,t}$

Table Appendix B.2: Result for all cumulative resource nodes

	Capacity constraints	Cumulative utility demand met by state for task	Cumulative utility produced by a task	Material balances
	$0 \le S_{s,t} \le C_s^{\max}$	$UI_{s,i,t} = uf_{i,s} W_{i,t} + uvi_{i,s} \sum_{\theta=t-p_i+1}^{t} B_{i,\theta}$	$UO_{s,i,t} = uf_{i,s} W_{i,t} + uvo_{i,s} \sum_{\theta=t-p_i+1}^{t} B_{i,\theta}$	$S_{s,t} = S_{s,t-1} + \sum_{i \in I} O_{s,i,t-dd_{s,i}} - \sum_{i \in I} I_{s,i,t} + \sum_{i \in I} UO_{s,i,t-dd_{s,i}} - \sum_{i \in I} UI_{s,i,t} + In_{s,t} - Out_{s,t} \quad \forall s \in S, \forall t \in 1,..,T$
State A **(S_A)**	$0 \le S_{A,t} \le \infty$	0	0	$S_{s_A,t} = S_{s_A,t-1} - I_{s_A,1,t}$
State B **(S_B)**	$0 \le S_{B,t} \le \infty$	0	0	$S_{s_B,t} = S_{s_B,t-1} + O_{s_B,8,t-1} - I_{s_B,2,t}$
State C **(S_C)**	$0 \le S_{C,t} \le \infty$	0	0	$S_{s_C,t} = S_{s_C,t-1} - I_{s_C,5,t}$
State D **(S_D)**	$0 \le S_{D,t} \le \infty$	0	0	$S_{s_D,t} = S_{s_D,t-1} - I_{s_D,3,t} - I_{s_D,4,t} - I_{s_D,6,t} - I_{s_D,7,t}$
State Hot A **(S_{HotA})**	$0 \le S_{HotA,t} \le 100$	0	0	$S_{s_{HotA},t} = S_{s_{HotA},t-1} + O_{s_{HotA},1,t-1} - I_{s_{HotA},2,t} - I_{s_{HotA},3,t} - I_{s_{HotA},4,t}$
STATE Int AB **(S_{IntAB})**	$0 \le S_{IntAB,t} \le 500$	0	0	$S_{s_{IntAB},t} = S_{s_{IntAB},t-1} + O_{s_{IntAB},2,t-1} + O_{s_{IntAB},8,t-1} - I_{s_{IntAB},5,t}$
STATE Int BC **(S_{IntBC})**	$0 \le S_{IntBC,t} \le 500$	0	0	$S_{s_{IntBC},t} = S_{s_{IntBC},t-1} + O_{s_{IntBC},5,t-1} - I_{s_{IntBC},6,t} - I_{s_{IntBC},7,t}$
STATE Impure P2 **($S_{ImpureP2}$)**	$0 \le S_{impureP2,t} \le 250$	0	0	$S_{s_{impureP2},t} = S_{s_{impureP2},t-1} + O_{s_{impureP2},5,t-1} - I_{s_{impureP2},8,t}$
STATE P1 **(S_{P1})**	$0 \le S_{P1,t} \le \infty$	0	0	$S_{s_{P1},t} = S_{s_{P1},t-1} + O_{s_{P1},3,t-2} + O_{s_{P1},4,t-2}$
STATE P2 **(S_{P2})**	$0 \le S_{P2,t} \le \infty$	0	0	$S_{s_{P2},t} = S_{s_{P2},t-1} + O_{s_{P2},8,t-2}$
STATE P3 **(S_{P2})**	$0 \le S_{P3,t} \le \infty$	0	0	$S_{s_{P3},t} = S_{s_{P3},t-1} + O_{s_{P3},6,t-1} + O_{s_{P3},7,t-1}$

Table Appendix B.3 (continued….): Result for all cumulative resource nodes

	Capacity constraints	Cumulative utility demand met by state for task	Cumulative utility produced by a task	Material balances
	$0 \le S_{s,t} \le C_s^{\max}$	$UI_{s,i,t} = uf_{i,s} W_{i,t} + uvi_{i,s} \sum_{\theta=t-p_i+1}^{t} B_{i,\theta}$	$UO_{s,i,t} = uf_{i,s} W_{i,t} + uvo_{i,s} \sum_{\theta=t-p_i+1}^{t} B_{i,\theta}$	$S_{s,t} = S_{s,t-1} + \sum_{i \in I} O_{s,i,t-dd_{s,i}} - \sum_{i \in I} I_{s,i,t} + \sum_{i \in I} UO_{s,i,t-dd_{s,i}} - \sum_{i \in I} UI_{s,i,t} + In_{s,t} - Out_{s,t} \quad \forall s \in S, \forall t \in 1,..,T$
***STATE Water* (S_{Water})**	$0 \le S_{Water,t} \le \infty$	0	0	$S_{s_{Water},t} = S_{s_{Water},t-1} + O_{s_{Water},10,t} + O_{s_{Water},16,t} - I_{s_{Water},9,t} - I_{s_{Water},10,t}$
***STATE Fuel* (S_{Fuel})**	$0 \le S_{Fuel,t} \le \infty$	0	0	$S_{s_{Fuel},t} = S_{s_{Fuel},t-1} - UI_{s_{Fuel},9,t} - UI_{s_{Fuel},10,t}$ $S_{s_{Fuel},t} = S_{s_{Fuel},t-1} - uvi_{9,s_{Fuel}} \sum_{\theta=t}^{t} B_{9,\theta} - uvi_{10,s_{Fuel}} \sum_{\theta=t}^{t} B_{10,\theta}$ $S_{s_{Fuel},t} = S_{s_{Fuel},t-1} - 0.1 \times \sum_{\theta=t}^{t} B_{9,\theta} - 0.142857 \times \sum_{\theta=t}^{t} B_{10,\theta}$
***STATE HP* (S_{HP})**	$0 \le S_{HP,t} \le 0$	$UI_{s_{HP},1,t} = 0.75 \times \sum_{\theta=t}^{t} B_{1,\theta}$	0	$S_{s_{HP},t} = S_{s_{HP},t-1} + O_{s_{HP},9,t} - I_{s_{HP},1,t-1} - I_{s_{HP},12,t-1} - UI_{s_{HP},1,t}$ $S_{s_{HP},t} = 0 + O_{s_{HP},9,t} - I_{s_{HP},11,t-1} - I_{s_{HP},12,t-1} - uvi_{1,s_{HP}} \sum_{\theta=t}^{t} B_{1,\theta}$ $S_{s_{HP},t} = O_{s_{HP},9,t} - I_{s_{HP},11,t-1} - I_{s_{HP},12,t-1} - 0.75 \times \sum_{\theta=t}^{t} B_{1,\theta}$
***STATE MP* (S_{MP})**	$0 \le S_{MP,t} \le 0$	$UI_{s_{MP},5,t} = 0.5 \times \sum_{\theta=t}^{t} B_{5,\theta}$ $UI_{s_{MP},6,t} = 0.25 \times \sum_{\theta=t}^{t} B_{6,\theta}$ $UI_{s_{MP},7,t} = 0.25 \times \sum_{\theta=t}^{t} B_{7,\theta}$	0	$S_{s_{MP},t} = S_{s_{MP},t-1} + O_{s_{MP},11,t} + O_{s_{MP},12,t} - I_{s_{MP},13,t} - UI_{s_{MP},5,t} - UI_{s_{MP},6,t} - UI_{s_{MP},7,t}$ $S_{s_{MP},t} = 0 + O_{s_{MP},11,t} + O_{s_{MP},12,t} - I_{s_{MP},13,t} - uvi_{5,s_{MP}} \sum_{\theta=t}^{t} B_{5,\theta} - uvi_{6,s_{MP}} \sum_{\theta=t}^{t} B_{6,\theta} - uvi_{7,s_{MP}} \sum_{\theta=t}^{t} B_{7,\theta}$ $S_{s_{MP},t} = O_{s_{MP},11,t} + O_{s_{MP},12,t} - I_{s_{MP},13,t} - 0.5 \times \sum_{\theta=t}^{t} B_{5,\theta} - 0.25 \times \sum_{\theta=t}^{t} B_{6,\theta} - 0.25 \times \sum_{\theta=t}^{t} B_{7,\theta}$
***STATE LP* (S_{LP})**	$0 \le S_{LP,t} \le 0$	$UI_{s_{LP},2,t} = 0.25 \times \sum_{\theta=t}^{t} B_{2,\theta}$ $UI_{s_{LP},3,t} = 0.5 \times \sum_{\theta=t}^{t} B_{3,\theta}$ $UI_{s_{LP},4,t} = 0.5 \times \sum_{\theta=t}^{t} B_{4,\theta}$	0	$S_{s_{LP},t} = S_{s_{LP},t-1} + O_{s_{LP},13,t} + O_{s_{LP},14,t} - UI_{s_{LP},2,t} - UI_{s_{MP},3,t} - UI_{s_{MP},4,t}$ $S_{s_{LP},t} = 0 + O_{s_{LP},13,t} + O_{s_{LP},14,t} - uvi_{2,s_{LP}} \sum_{\theta=t}^{t} B_{2,\theta} - uvi_{3,s_{LP}} \sum_{\theta=t}^{t} B_{3,\theta} - uvi_{4,s_{LP}} \sum_{\theta=t}^{t} B_{4,\theta}$ $S_{s_{LP},t} = O_{s_{LP},13,t} + O_{s_{LP},14,t} - 0.25 \times \sum_{\theta=t}^{t} B_{2,\theta} - 0.5 \times \sum_{\theta=t}^{t} B_{3,\theta} - 0.5 \times \sum_{\theta=t}^{t} B_{4,\theta}$
***STATE Int MP* (S_{IntMP})**	$0 \le S_{IntMP,t} \le 0$	0	0	$S_{s_{IntMP},t} = S_{s_{MIntP},t-1} + O_{s_{IntMP},12,t} - I_{s_{IntMP},14,t}$ $S_{s_{IntMP},t} = O_{s_{IntMP},12,t} - I_{s_{IntMP},14,t}$
***STATE Int LP* (S_{IntMP})**	$0 \le S_{IntLP,t} \le 0$	0	0	$S_{s_{IntLP},t} = S_{s_{IntLP},t-1} + O_{s_{IntLP},14,t} - I_{s_{IntLP},15,t}$ $S_{s_{IntMP},t} = O_{s_{IntMP},14,t} - I_{s_{IntMP},15,t}$
***State Elec:* (S_{Elec})**	$0 \le S_{Elec,t} \le 0$	$UI_{s_{Elec},6,t} = 0.005 \times \sum_{\theta=t}^{t} B_{6,\theta}$ $UI_{s_{Elec},7,t} = 0.01 \times \sum_{\theta=t}^{t} B_{7,\theta}$ $UI_{s_{Elec},8,t} = 0.005 \times \sum_{\theta=t}^{t} B_{8,\theta}$ $UI_{s_{Elec},16,t} = 0.005 \times 10^{-3} \times \sum_{\theta=t}^{t} B_{16,\theta}$	$UO_{s_{Elec},12,t} = 2.481 \times 10^{-3} \times \sum_{\theta=t}^{t} B_{12,\theta}$ $UO_{s_{Elec},14,t} = 2.585 \times 10^{-3} \times \sum_{\theta=t}^{t} B_{14,\theta}$ $UO_{s_{Elec},15,t} = 1.192 \times 10^{-3} \times \sum_{\theta=t}^{t} B_{15,\theta}$	$S_{s_{Elec},t} = S_{s_{Elec},t-1} + UO_{s_{Elec},12,t-dd_{12}} + UO_{s_{Elec},14,t-dd_{14}} - UI_{s_{Elec},6,t} - UI_{s_{Elec},7,t} - UI_{s_{Elec},8,t}$ $S_{s_{Elec},t} = 0 + uvo_{12,s_{Elec}} \sum_{\theta=t}^{t} B_{12,\theta} - uvo_{14,s_{Elec}} \sum_{\theta=t}^{t} B_{14,\theta} - uvo_{15,s_{Elec}} \sum_{\theta=t}^{t} B_{15,\theta} - uvi_{6,s_{Elec}} \sum_{\theta=t}^{t} B_{6,\theta} - uvi_{7,s_{Elec}} \sum_{\theta=t}^{t} B_{7,\theta} - uvi_{8,s_{Elec}} \sum_{\theta=t}^{t} B_{8,\theta}$ $S_{s_{Elec},t} = 2.481 \times 10^{-3} \times \sum_{\theta=t}^{t} B_{12,\theta} + 2.585 \times 10^{-3} \times \sum_{\theta=t}^{t} B_{14,\theta} + 1.912 \times 10^{-3} \times \sum_{\theta=t}^{t} B_{15,\theta} - 10 \times 10^{-3} \times \sum_{\theta=t}^{t} B_{6,\theta} - 10 \times 10^{-3} \times \sum_{\theta=t}^{t} B_{7,\theta} - 5 \times 10^{-3} \times \sum_{\theta=t}^{t} B_{8,\theta}$
***State Exhst:* (S_{Ehst})**	$0 \le S_{Ehst,t} \le \infty$	0	0	$S_{s_{Ehst},t} = S_{s_{Ehst},t-1} + O_{s_{Ehst},15,t} - I_{s_{Ehst},16,t} - UI_{s_{Ehst},16,t}$ $S_{s_{Ehst},t} = S_{s_{Ehst},t-1} + O_{s_{Ehst},15,t} - I_{s_{Ehst},16,t} - uvi_{16,s_{Elec}} \sum_{\theta=t}^{t} B_{16,\theta}$

B.3 GANTT CHART OF ILLUSTRATIVE EXAMPLE

$$Cost = \sum_{s\in S} h_s \cdot S_{s,t} + \sum_{t}^{T} \sum_{s\in S_{elec}} electricity\ price \cdot In_{s_{Elec},t} + \sum_{t}^{T} \sum_{s\in S} h_s \cdot Out_{s,t}$$
$$+ \sum_{t}^{T} so_x \cdot penalty\ price\ for\ SO_X + \sum_{t}^{T} ghg_x \cdot price\ of\ GHG$$

The objective function is a weighted sum of electricity purchase cost , storage parameters for tardiness starting date and the penalty cost incurred due to emissions of green house gases and SO_x.
The short-term schedule attained through ERTN representation is presented in figure B.1. The schedule gives nature, time and batchsize of tasks undertaken in each resource of industrial unit.

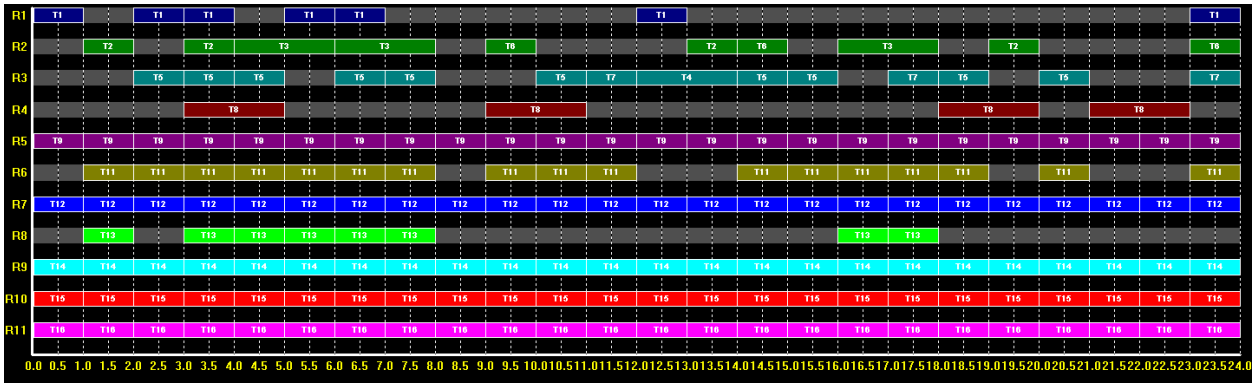

Figure B.1: Integrated scheduling model

The ERTN extends its predecessors network representation by incorporating the operational planning aspects of an onsite utility system. The use of ERTN representation results in a universal scheduling model which simultaneously performs scheduling of production plant and that of onsite utility system.

APPENDIX C

DATA FOR EXAMPLES 1, 2 & 3 AND CHP PLANT

C.1 FOUR KEY ELEMENTS NEEDED FOR PRODUCTION PLANT:

As mentioned in chapter 5, four key elements are required to completely analyze all the aspects related to production plant – product recipe, plant topology, resource allocation matrix and utility consumption matrix. Each of these elements are directly represented in ERTN. This section displays the four key elements for example 2 and 3, which are used for comparison of integrated and sequential scheduling approaches.

C.1.1 Example 2

The production plant in example 2 converts 3 raw materials (A, B and C) into 4 intermediate products (Hot A, Int AB, Int BC and Impure P2) and 2 finished products (P1 and P2).

C.1.1.1 Recipe

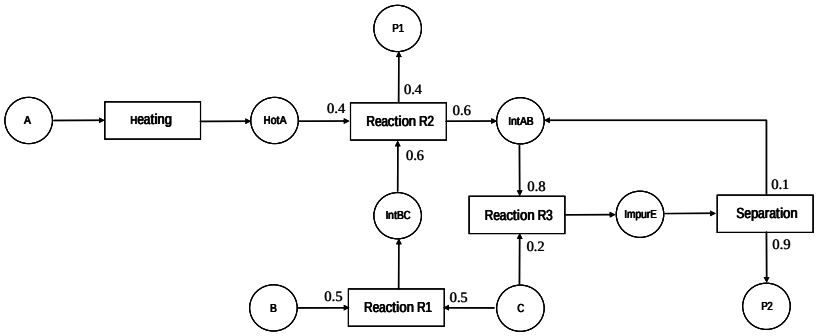

Figure C.1: STN representation of the product recipe for example 2

C.1.1.2 Plant typology

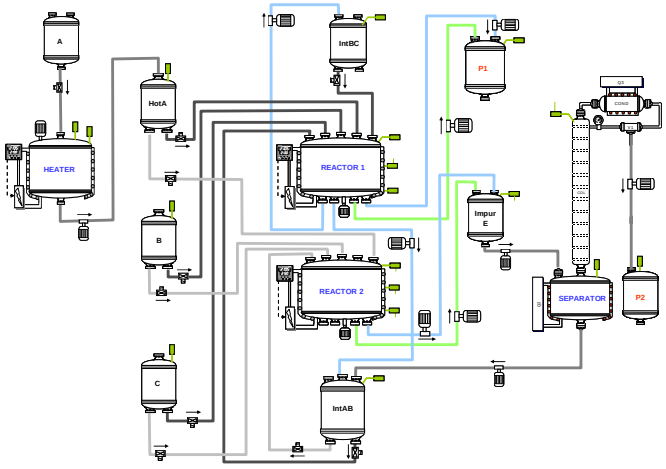

Figure C.2: Plant topology of the example 2

C.1.1.3 Resource Allocation Matrix (RAM)

Table C.1 : Allocation matrix for example 2

Reaction (hr) / Reactor	Heating	R1	R2	R3	Separator
J1 (Heater)	1	-	-	-	**-**
J2	-	2	2	1	**-**
J3	-	2	2	1	**-**
J4 (Separator)	-	-	-	-	2

C.1.1.4 Utility Consumption Matrix (UCM)

Table C.2 : Utility consumption matrix ($Cop_{v,k}$) for example 2

Tasks	1	2	3	4	5	6	7	8
LP steam	0	0	0	2	2	0	0	1
MP Steam	0	2	2	0	0	0	0	0
HP Steam	4	0	0	0	0	0	0	0
Electricity	0	0.1	0.1	0.1	0.1	0.1	0.1	0

C.1.2 Example3

The production plant in example 3 converts 4 raw materials (A, B, C and G) into 7 intermediate products (Int A, Int B, Int AB, E, Int EC, D and F) and 2 finished products (P1 and P2).

C.1.2.1 Recipe

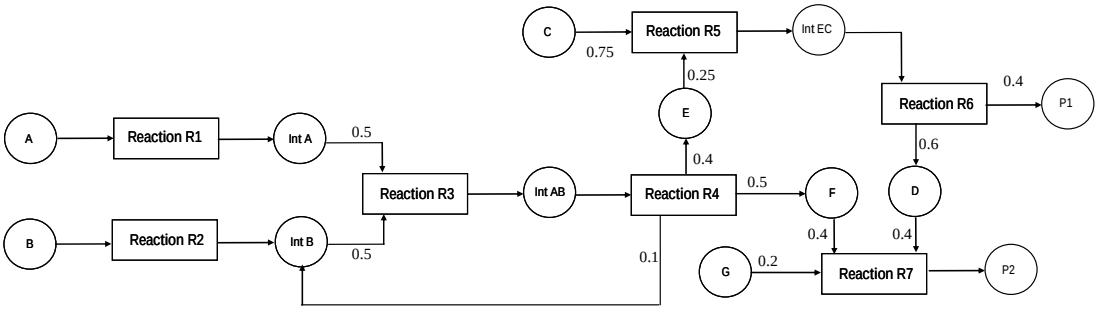

Figure C.3: STN representation of example 3

C.1.2.2 Plant typology

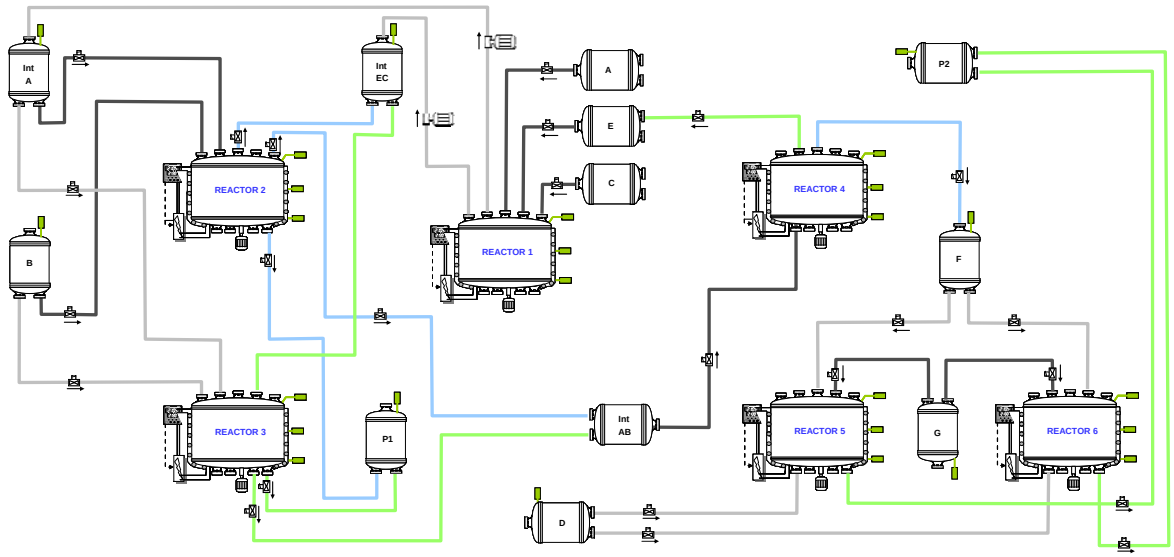

Figure C.4: Plant topology for example 3

C.1.2.3 Resource Allocation Matrix (RAM)

Table C.3 : Allocation matrix for example 3

Reaction (hr) / Reactor	R1	R2	R3	R4	R5	R6	R7
J1	1	-	-	-	2	-	-
J2	-	2	1	-	-	2	-
J3	-	2	1	-	-	2	-
J4	-	-	-	3	-	-	-
J5	-	-	-	-	-	-	2
J6	-	-	-	-	-	-	2

C.1.2.4 Utility Consumption Matrix (UCM)

Table C.4 : Utility consumption matrix ($Cop_{v,k}$) for example 3

Tasks	1	2	3	4	5	6	7	8	9	10	11
LP steam	0	0	0	1	1	0	2	0	0	0	0
MP Steam	0	1.5	1.5	0	0	0	0	1	1	0	0
HP Steam	1	0	0	0	0	1	0	0	0	0	0
Electricity	0	0.1	0.1	0.1	0.1	0	0	0	0	0.1	0.1

C.2 PARAMETERS USED IN MODELING OF CHP AND PRODUCTION PLANTS

Parameters of the CHP plant

Description	Fuel 1	Fuel 2
Calorific value of fuel: cc_{fuel} *(KJ/kg)*	*23*	*16.70*
Storage capacity of fuel *(tons)*	*3,000*	*10,000*
Fuel at start of time horizon *(tons)*	*3,000*	*3,000*
GHG *(tons of emission/ton of fuel)*	*2.466*	*1.858*
SO_x *(tons of emission/ton of fuel)*	*0.012925*	*0.02585*
Cost of fuel: cf_{fuel} *(€/ton)*	*50*	*30*
Minimum storage level of fuel (10% of storage capacity)	*300*	*1,000*
	Boiler 1	**Boiler 2**
Boiler efficiency $\eta 1_{(fuel1)}$	*0.80*	*0.80*
Boiler efficiency $\eta 2_{(fuel1)}$	*0.77*	*0.77*
Boiler efficiency $\eta 3_{(fuel1)}$	*0.70*	*0.70*
Boiler efficiency $\eta 4_{(fuel1)}$	*0.47*	*0.47*
Boiler efficiency $\eta 1_{(fuel2)}$	*0.65*	*0.65*
Boiler efficiency $\eta 2_{(fuel2)}$	*0.62*	*0.62*
Boiler efficiency $\eta 3_{(fuel2)}$	*0.55*	*0.55*
Boiler efficiency $\eta 4_{(fuel2)}$	*0.32*	*0.32*
Maximum boiler capacity: $V_k^{\max}$ *(tons/h)*	*350*	*400*
Minimum boiler capacity: $V_k^{\min}$ *(tons/h)*	*60*	*70*
Fuel 1 consumed during restart *(tons)*	*1.7345*	*2.5476*
Fuel 2 consumed during restart *(tons)*	*2.0236*	*2.9721*
Feed water enthalpy : h_{fw} *(KJ/kg)*	*0.56677*	*0.56677*
	Turbine 1	**Turbine 2**
Maximum turbine capacity: $V_k^{\max}$ *(tons/h)*	*500*	*500*
Minimum turbine capacity: $V_k^{\min}$ *(tons/h)*	*0*	*0*
Turbine efficiency: $\eta_{turbine}$	*0.80*	*0.80*
HP steam enthalpy: h_b *(KJ/kg)*	*3.06677*	*3.06677*
MP steam enthalpy: h_m *(KJ/kg)*	*2.95509*	*2.95509*
LP steam enthalpy: h_l *(KJ/kg)*	*2.83875*	*2.83875*
Exhaust steam enthalpy: h_e *(KJ/kg)*	*2.75268*	*2.75268*

Cost Parameters	
SO_x penalty cost: *COSTSOx (€/ton)*	*23.0*
GHG penalty cost: *COSTGHG (€/ton)*	*0*
Electricity cost: *COSTEL (€/MWh)*	*80*

Parameters for Example 1

	V_k^{min} *(kg)*	V_k^{max} *(kg)*	
Process Equipment 1	10	100	
Process Equipment 2	10	80	
Process Equipment 3	10	50	
Process Equipment 4	10	80	
Process Equipment 5	10	80	
	l_r	C_r^{max} *(kg)*	$R_{r,0}$ *(kg)*
Resource A	0	100,000	5,000
Resource B	1	200	0
Resource C	1	250	0
Resource D	0	100,000	5,000
Resource E	1	200	0
Resource F	1	250	0
Resource G	0	100,000	5,000
Resource H	1	200	0
Resource I	1	250	0
Resource Product P1	2	10,000	0
Resource Product P2	2	10,000	0
Resource Product P3	2	10,000	0
Maximum (100 %) production capacity	*Product P1 (kg)*	*Product P2 (kg)*	*Product P3 (kg)*
Cycle 1	0	0	50
Cycle 2	130	0	0
Cycle 3	170	0	50
Cycle 4	0	50	50
Cycle 5	50	0	0
Cycle 6	160	150	0
Cycle 7	170	0	20
Cycle 8	70	130	0
Cycle 9	50	130	0
Cycle 10	50	50	170

Parameters for Example 2

	V_k^{min} *(kg)*	V_k^{max} *(kg)*	
Process Equipment 1	10	100	
Process Equipment 2	10	80	
Process Equipment 3	10	50	
Process Equipment 4	10	100	
	l_r	C_r^{max} *(kg)*	$R_{r,0}$ *(kg)*
Resource A	0	10,000	5,000
Resource B	0	10,000	5,000
Resource C	0	10,000	5,000
Resource Hot A	1	100	0
Resource Int AB	1	200	0
Resource Int BC	1	150	0
Resource ImpureP2	1	100	0
Resource Product P1	2	10,000	0
Resource Product P2	2	10,000	0
Maximum (100 %) production capacity	*Product P1 (kg)*	*Product P2 (kg)*	
Cycle 1	0	0	
Cycle 2	0	233	
Cycle 3	0	0	
Cycle 4	0	133	
Cycle 5	0	0	
Cycle 6	0	258	
Cycle 7	258	258	
Cycle 8	258	258	
Cycle 9	258	258	
Cycle 10	258	158	

Parameters for Example 3

	V_k^{min} *(kg)*	V_k^{max} *(kg)*
Process equipment 1	10	100
Process equipment 2	10	80
Process equipment 3	10	50
Process equipment 4	10	70
Process equipment 5	10	100
Process equipment 6	10	100

	l_r	C_r^{max} *(kg)*	$R_{r,0}$ *(kg)*
Resource A	0	10,000	5,000
Resource B	0	10,000	5,000
Resource Int A	1	100	5,000
Resource Int B	1	100	5,000
Resource Int AB	1	300	0
Resource D	1	150	0
Resource E	1	150	0
Resource C	0	10,000	5,000
Resource Int EC	1	150	0
Resource F	1	150	0
Resource G	0	10,000	5,000
Resource Product P1	2	10,000	0
Resource Product P2	2	10,000	0

Maximum (100 %) production capacity	*Product 1 (kg)*	*Product 2 (kg)*
Cycle 1	0	0
Cycle 2	100	0
Cycle 3	33	0
Cycle 4	133	132
Cycle 5	133	0
Cycle 6	133	64

Maximum (100 %) production capacity	*Product 1 (kg)*	*Product 2 (kg)*
Cycle 7	133	78
Cycle 8	133	108
Cycle 9	0	40
Cycle 10	0	112

NOMENCLATURE

Indices

j	processing equipment (production plant and boilers/turbines in CHP plant)	-
k	tasks	-
r	resource	-
s	states	-
t,t',θ	time period	-
u	utility	-

Sets

J	collection of processing equipments	-
J^{rstrt}	collection of processing equipments which need to go through a restart task	-
K	collection of tasks	-
K_j	collection of tasks that can be processed in equipment j	-
K_i^{rstrt}	collection of restart tasks performed in processing equipment j	-
K_j^{op}	collection of tasks performed in processing equipment j other than the restart task	-
K_s^{cons}	collection of task k which consume state s	-
K_s^{prod}	collection of task k which produce state s	-
K_r^{cons}	collection of task k which consume resource r	-
K_r^{prod}	collection of task k which produce resource r	-
R	collection of resources	-
R_k^J	collection of processing equipment resources J used by task k	-
S	collection of states	-
U	collection of utility plant	-

Parameters

General Parameters

$\alpha_{u,k,\theta}$	fixed demand factor of utility u by task k at time θ relative to start of task	ton/hr of steam or MW of electricity
$\beta_{u,k,\theta}$	variable demand factor of utility u by task k at time θ relative to start of task	(ton/h of steam or MW of electricity) per kg of batchsize

$\Phi_{k,r,t'}$	fixed proportion of resource *r* produced (positive value) or consumed (negative value) by task *k* at time *t'* relative to start of task	kg of material, ton/hr of steam or MW of electricity
$v_{k,r,t'}$	variable proportion of resource *r* produced (positive value) or consumed (negative value) by task *k* at time *t'* relative to start of task	(kg of material, ton/hr of steam or MW of electricity) per unit of batchsize
$uf_{k,r}^{cons}$	fixed quantity of utility resource *r* consumed by task *k*	kg of material, ton/hr of steam or MW of electricity
$uv_{k,r}^{cons}$	variable proportion of utility resource *r* consumed by task *k* with respect to the batchsize	(kg of material, ton/hr of steam or MW of electricity) per unit of batchsize
$uf_{k,r}^{prod}$	fixed quantity of utility resource *r* produced by task *k*	kg of material, ton/hr of steam or MW of electricity
$uv_{k,r}^{prod}$	variable proportion of utility resource *r* produced by task *k* with respect to the batchsize	(kg of material, ton/hr of steam or MW of electricity) per unit of batchsize
$\rho_{k,s}^{cons}$	proportion of state *s* consumed by task *k*	-
$\rho_{k,s}^{prod}$	proportion of state *s* produced by task *k*	-
$\rho_{k,r}^{cons}$	proportion of resource *r* consumed by task *k* (given by material fixed flow arc)	-
$\rho_{k,r}^{prod}$	proportion of resource *r* produced by task *k* (given by material fixed flow arc)	-
$\mu_{k,s}^{cons}$	proportion parameter for resource *r* consumed by task *k* (given by material free flow arc)	-
$\mu_{k,s}^{prod}$	proportion parameter for resource *r* produced by task *k* (given by material free flow arc)	-
cf_{fuel}	cost of fuels	€/ton
CEL	electricity purchase cost	€/MW.hr
CGHG	cost incurred for emissions of GHG	€/ton
CSOX	cost incurred for emissions of SO_x	€/ton
$Cop_{u,k}$	utility *u* consumed for task *k*	ton/hr of steam or MW of electricity
dd_k	delivery time required for task *k* to convert input stream into output stream	hr
l_s	inventory coefficient for state *s* that is used to obtain the tardiness starting date	-
l_r	inventory coefficient for resource *r* that is used to obtain the tardiness starting date	-
M	a very large numeric value set arbitrarily (big M)	-
p_k	time duration for executing task *k*	hr
T	time horizon	hr

Capacity Parameters

$S_{s,0}$	initial storage capacity of state *s*	kg or tons
$C_s^{\max}$	maximum storage capacity of state *s*	kg or tons
$R_{r,0}$	initial storage capacity of resource *r*	kg or tons
$C_r^{\max}$	the maximum storage capacity of resource *r*	kg or tons

$V_{k,j}^{min}$	minimum size of processing equipment *j* when processing task *k*	kg or tons
$V_{k,j}^{max}$	maximum size of processing equipment *j* when processing task *k*	kg or tons
V_k^{min}	minimum batchsize of processing task *k*	kg or tons
V_k^{max}	maximum batchsize of processing task *k*	kg or tons
In_s^{max}	maximum import into state *s* from an external source at period *t*	kg of material, MW of electricity and ton/hr of steam
Out_s^{max}	maximum export into state *s* from an external source at period *t*	tons of material, MW of electricity and ton/hr of steam
In_r^{max}	maximum import into resource *r* from an external source at period *t*	kg of material, MW of electricity and ton/hr of steam
Out_r^{max}	maximum export into resource *r* from an external source at period *t*	kg of material, MW of electricity and ton/hr of steam

Binary variables

$W_{k,j,t}$	define if task *k* starts in processing equipment *j* at the beginning of time period *t*	-
$W_{k,t}$	define if task *k* starts at the beginning of time period *t*	-

Continuous variables

$\Pi_{r,t}$	defines the amount of resource *r* provided by an external source (positive number) or supplied to an external source (negative number) at time period *t*	kg of material, MW of electricity and ton/hr of steam
$B_{k,j,t}$	batchsize of task *k* in started at the beginning of time period *t* in processing equipment *j*	kg of material and ton/hr of steam
$B_{k,j,t}$	batchsize of task *k* in started at the beginning of time period *t*	kg of material and ton/hr of steam
$D_{s,t}$	demand of state *s* at the time period *t*	kg of material
$CGlob_{u,t}$	demand of utility *u* from manufacturing processing equipment in time period *t* with *u* = LP steam, MP steam, HP steam & Electricity	ton/hr of steam and MW of electricity
ELP_t	electricity purchased during the period *t*	MW
$I_{r,k,t}$	quantity of material or material flow into task *k* from resource *r* at time period *t*	kg of material and ton/hr of steam
$In_{s,t}$	import into state *s* from an external source at start of period *t*	kg of material, ton/hr of steam and MW of electricity
$In_{r,t}$	import into resource *r* from an external source at start of period *t*	kg of material, ton/hr of steam and MW of electricity

$O_{r,k,t}$	quantity of material or material flow from task *k* from resource *r* at time period *t*	kg of material, ton/hr of steam and MW of electricity
$Out_{s,t}$	export into state *s* from an external source at start of time period *t*	kg of material, ton/hr of steam and MW of electricity
$Out_{r,t}$	export into resource *r* from an external source at start of time period *t*	kg of material, ton/hr of steam and MW of electricity
$R_{r,t}$	the amount of resource *r* available at period *t*	kg of material, ton/hr of steam and MW of electricity
$R_{r,t}^{\max}$	maximum availability of resource *r* period *t*	kg of material, ton/hr of steam and MW of electricity
$S_{,t}$	the amount of material stored in state *s* at start of period *t*	kg of material
$UI_{r,k,t}$	utility flow coming into task *k* from resource *r* at time period *t*	kg of material, ton/hr of steam and MW of electricity
$UO_{r,k,t}$	utility flow coming into task *k* from state *s* at time period *t*	kg of material, ton/hr of steam and MW of electricity
$U_{u,t}$	total demand for utility *u* over time period *t*	ton/hr of steam and MW of electricity
ELP_t	electricity purchased during the period *t*	MW
$U_{u,t}^{\max}$	Maximum demand for utility *u* over time period *t*	ton/hr of steam and MW of electricity
$UCons_{u,k,t}$	consumption of utility *u* by a task *k* at time during time period *t*	ton/hr of steam and MW of electricity

BIBLIOGRAPHY

A

Adonyi R., J. Romero, L. Puigjaner and F. Friedler, 2003,
Incorporating Heat Integration in Batch Process Scheduling,
Applied Thermal Engineering, Vol. 23 (14), pp. 1743-1762.

Aguilar O., S.J. Perry, J.-K. Kim and R. Smith, 2007,
Design and Optimization of Flexible Utility System Subject to Variable Conditions: Part 1: Modeling Framework,
Trans IChemE, Part A, Chemical Engineering Research and Design, Vol. 82(A8), pp. 1136-1148.

Aguilar O., S.J. Perry, J.-K. Kim and R. Smith, 2007,
Design and Optimization of Flexible Utility System Subject to Variable Conditions: Part 2: Methodology and Applications,
Trans IChemE, Part A, Chemical Engineering Research and Design, Vol. 82(A8), pp. 1149-1168.

Applequist G., O. Samikoglu, J. Pekny and G. Reklaitis, 1997,
Issues in the Use, Design and Evolution of Process Scheduling and Planning Systems,
ISA Transactions, Vol.36 (2), pp. 81-121.

B

Barbosa-Povoa A.P., 2007,
A Critical Review on the Design and Retrofit of Batch Plants,
Computers and Chemical Engineering, Vol. 31, pp. 833-855

Baranzani A., J. Goldemberg, S. Speck, 2000,
A Future for Carbon Taxes,
Ecological Economics, Vol. 32 (3), pp. 395-412

Bruno J.C., F. Fernandez, F. Castells and I.E. Grossmann, 1998,
A Rigorous MINLP Model for the Optimal Synthesis and Operation of Utility Plants,
TransIChemE, PartA, Chem Engg Res Des, Vol .76, pp. 246-258.

Behdani B., M.R. Pishvaie and D. Rashtchian, 2007,
Optimal scheduling of mixed batch and continuous processes incorporating utility aspects.
Chemical Engineering and Processing, Vol. 46(4), pp. 271-281.

Vaklieva-Bancheva N, B.B. Ivanov, N. Shah and C.C. Pantelides, 1996,
Heat Exchanger Network Design For Multipurpose Batch Plants,
Computers & Chemical Engineering,Vol. 20 (8), pp. 989–1001.

L.G. Papageorgiou, N. Shah and C.C. Pantelides, 1994,
Optimal scheduling of heatintegrated multipurpose plants,
Ind. Eng. Chem. Res. 33, pp. 3168–3186.

C

Caddet (Centre for the Analysis and Dissemination of Demonstrated Energy Technology), 1999,
Industrial Symbiosis. Waste for One Company is Added Value for Another.
Caddet energy Efficiency I.E.A./ OECD, Brochure N°R363.

C.L. Chen and C.Y. Chang, 2009,
A Resource-Task Network Approach For Optimal Short-Term/Periodic Scheduling And Heat Integration In Multipurpose Batch Plants,
Applied Thermal Engineering, (available on-line).

Chou C.C. and Y.S Shih, 1987,
A Thermodynamic Approach to the Design and Synthesis of Plant Utility System,
Industry & Engineering Chemistry Research, Vol. 26, pp. 1100-1108

Corominas J., A. Espuna and L. Puigjaner, 1994,
A Thermodynamic Approach to the Design and Synthesis of Plant Utility System,
Computers and Chemical Engineering, Vol. 18 (11), pp. 1043-1055

D

Dockx. K, Y.D. Boeck and K. Meert, 1997,
Interactive Scheduling in the Chemical Process Industry,
Computers Chem. Engng., Vol. 21 (9), pp. 925-945

E

Efthimeros G.A. and D.T. Tsahalis, 2000,
Intensified energy-saving technologies developed in EU-funded research: a review,
Applied Thermal Engineering, Vol. 20, pp. 1607-1613

Egli U.M. and D. W. T. Rippin, 1986,
Short-Term Scheduling For Multiproduct Batch Chemical Plants
Computers and Chemical Engineering, Vol. 10(4), pp. 303 - 325.

EIA, Environment Information Administration, 2000,
The Changing Structure of the Electric Power Industry 2000: An Update,
Department of Energy U.S.A Government.
http://www.eia.doe.gov/cneaf/electricity/chg_stru_update/chapter3.html

EIA, Environment Information Administration, 2007,
Annual Energy Outlook 2007,
Department of Energy U.S.A Government, DOE/EIA-0383(2007).
http://tonto.eia.doe.gov/ftproot/forecasting/0383(2007).pdf

EIA, Environment Information Administration, 2007b,
Energy Trends in Selected Manufacturing Sectors: Opportunities and Challenges for Environmentally Preferable Energy Outcomes,
Prepared by ICF International for U.S. Environmental Protection Agency.
http://www.epa.gov/opispdwb/pdf/energy/ch2.pdf

El-Hawary M.E. and G.S. Christensen, 1993,
Optimal Economic Operation of Electric Power Systems,
Academia Press, Inc.

El-Kordy M.N., M.A. Badr and S.M.A Ibrahim, 2002,
Economic evaluation of electricity generation considering externalities,
Renewable Energy, Vol. 25(2), pp. 317-328.

Energetics Incorporated and E3M Incorporated, 2004,
Energy Use, Loss and Opportunity Analysis: U.S. Manufacturing and Mining,
Prepared for United States Department of Energy.

European Commission, 1997,
A Community Strategy to Promote Combined Heat and Power (CHP) and Dismantle the Barriers to its Development,
Commission of the European Communities
http://tecnet.pte.enel.it/depositi/tecnet/bestpractice/390/41029-14T.pdf

F

Floudas C. A. and Lin, X. (2004).
Continuous-time versus Discrete-time Approaches for Scheduling of Chemical Processes: A review.
Computers and Chemical Engineering, Vol. 28, pp. 2109–2129.

G

Ganeshan R. and T.P. Harrison, 1995,
An introduction to Supply Chain Management,
Department of Management Science and Information Systems, Pen State University, USA.
http://lcm.csa.iisc.ernet.in/scm/supply_chain_intro.html (last accessed 30th June 2009)

Gibbs D. and P. Deutz, 2007,
Reflexion on Implementing Industrial Ecology Through Eco-industrial Park Development,
Journal of Cleaner Production, Vol. 15 (17), pp. 1683-1695.

Graveland A.J.G.G. and E. Gisolf, 1998,
Exergy Analysis : an efficient tool for process optimization and understanding,
Computer and Chemical Engineering, Vol. 22. Supplement S545-S553

Grenelle de l'Environnement, 2009,
Lutter contre les changements climatiques et maîtriser l'énergie
http://www.legrenelle-environnement.fr/spip.php?rubrique5

Grossmann I.E., 2005,
Enterprise-wide Optimization: A New Frontier in Process Systems Engineering,
AIChE Journal, Vol. 51, pp. 1846- 1857

Grossmann, I.E. and J. Santibanez, 1980,
Applications of Mixed Integer Linear Programming in Process Synthesis,
Computers and Chemical Engineering, Vol. 4, pp. 205-214.

Gundersen T., 2000,
Process integration PRIMER,
SINTEF Energy Research

H

Hait A., C. Artigues, M. Trepanier and P. Baptiste,2007,
Ordonnancement Sous Contraintes d'énergie et de ressources humaines.
In: 11ème Congrès de la Société Française de Génie des Procédés. Saint-Etienne (France), 2007.

Handl K.H., 1997,
75 MW heat extraction from Beznau nuclear power plant (Switzerland),
Nordostschweizerische Kraftwerke AG, Baden (Switzerland))
http://www.iaea.org/inisnkm/nkm/aws/htgr/fulltext/29067739.pdf

Hinderink AP., FPMJ Kerkhof, ABK Lie, J De Swaan Arons and HJ Van Der Kooi, 1996,
Exergy analysis with a flowsheeting simulator – I. Theory : calculating exergies of material streams,
Chemical Engineering Science, Vol. 51, pp. 4693-4700

Hiremath, R.B., S. Shikha and N.H. Ravindranath, 2007,
Decentralized Energy Planning: Modeling and Application – a Review,
Renewable and Sustainable Energy Reviews, Vol. 11, pp. 729-752.

Hohmann E.C. , 1971.,
Optimum Networks for Heat Exchange,
Ph.D. Thesis, University of Southern California.

Honkomp S.J., S. Lombardo, O. Rosen and J.F. Pekny, 2000,
The Curse of Reality – Why Process Scheduling Optimization Problems are Difficult in Practice,
Computers and Chemical Engineering, Vol. 24, pp. 323-328
Grossmann I.E., 2005,

I

IAC, InterAcademy Council, 2007,
Lighting the Way: Towards a Sustainable energy Future.
P.O. Box 19121, 1000 GC | Amsterdam, The Netherlands.
http://www.interacademycouncil.net/CMS/Reports/11840.aspx (last accessed on 27th April, 2009)

IEA, International Energy Agency, 2000,
Energy Policies of IEA Countries – France 2000 review.
9, rue de la Féderation, 75739, Paris, cedex 15, France.
http://www.iea.org/textbase/nppdf/free/2000/france2000.pdf (last accessed on 27th June, 2009)

IEC, International Electrotechnical Commission, 1997,
Batch Control Part 1 : Models & Terminology (IEC
3, rue de Varembé Geneva, Switzerland.
http://webstore.iec.ch/webstore/webstore.nsf/artnum/022377

J

Janak, S. L. & C.A. Floudas,2006,
Production scheduling of a large-scale industrial batch plant. I. Short-term and medium-term scheduling,
Industrial and Engineering Chemistry Research 45, pp. 8234-8252.

JVP International, Inc. and Psage Research LLC, 2004
Exergy Analysis: A Powerful Tool for Identifying Process Inefficiencies in the U.S. Chemical Industry
Chemical bandwidth study – Industrial Technologies Program
Prepared for U.S Department of Energy
http://www1.eere.energy.gov/industry/pdfs/chemical_bandwidth_report.pdf (last accessed on 27th June, 2009)

K

Kallrath, J., 2002,
Planning and Scheduling in the Process industry,
OR Spectrum, Vol. 24, pp. 219-250.

Kalitventzeff. B, 1991,
Mixed Integer Non-Linear Programming And Its Application To The Management Of Utility Networks
Engineering Optimization, Vol. 18, pp. 183 – 207

Kemp I.C. and A.W.Deakin, 1989,
The Cascade analysis for Energy and Process Integration Of Batch Processes Part I: Calculation Of Energy Targets
Chemical Engineering Research and Design – Vol. 67, pp. pp. 495-509

Kemp I.C., 2007,

Pinch Analysis and Process Integration: A User Guide on Process Integration for the Efficient Use of Energy

Published by: Elsevier Ltd., 2nd Edition, ISBN 0-7506-8260-4.

Applied Thermal Engineering, Vol. 22(2), pp. 485-494.

Kondili E., C.C. Pantelides and W.H. Sargent, 1988,

A general algorithm for scheduling batch operations,

In: 3rd International Symposium Process Systems Engineering, Sydney, pp. 62-75.

Kondili E., C.C. Pantelides and W.H. Sargent, 1993,

A general algorithm for short-term scheduling of batch operations – I. MILP Formulation,

Computers and Chemical Engineering, Vol. 17 (2), pp. 211-227.

L

Lambert D.M. and M.C. Cooper, 2000,

Issues in supply chain management,

Industrial Marketing Management, Vol. 29, pp. 65-83.

Le Goff P., 1979,
Energétique Industrielle: Application En Génie Chimique : Echangeurs, Séparateurs, Réacteurs, Energétique Industrielle, Tome 3, Technique et Documentation

Leites I.L., D.A. Sama, N. Lior, 2003,
The Theory And Practice Of Energy Saving In The Chemical Industry : Some Methods For Reducing Thermodynamic Irreversibility,
Chemical Technology Processes, *Energy*, 28, 55-97

Lemar Jr. P.L., 2001,

The Potential Impact of Policies to Promote Combined Heat and Power in US Industry,

Energy Policy, Vol. 29 (14), pp. 1243-1254.

Linnhoff B. and J.R. Flower, 17978a,
Synthesis of Heat Exchanger Networks: I. Systematic Generation of Energy Optimal Networks,
AIChE Jl., Vol. 24, pp. 633-642.

Linhoff B. and E. Hindmarsh, 1983,
The Pinch Design Method for Heat Exchange Network,
Chemical Engineering Science, Vol. 38, pp. 745-763.

Linhoff B., 1994,
Use of Pinch Analysis to Knock Down Capital Cost and Emission,
Chemical Engineering Progress, August 1994.

M

Majozi T., 2006,
Heat Integration Of Multipurpose Batch Plants Using A Continuous Time Framework,
Applied Thermal. Engineering, Vol. 26, pp. 1369–1377.

Maia L.O.A, L.A.Videl and R.Y.Qassim, 1995,
Synthesis Of Utility Systems By Simulated Annealing
Computers & Chemical Engineering, Vol. 19(4), pp. 481-488

Maia L.O.A and R.Y.Qassim, 1997,
Synthesis of Utility Systems With Variable Demands Using Simulated Annealing,
Computers & Chemical Engineering, Vol. 21, pp. 947-950.

Maréchal F. and B. Kalitventzeff, 1998,
Process Integration: Selection of the Optimal Utility System,
Computers and Chemical Engineering, Vol.22 (Suppl.), pp. S149-S156.

Maréchal F. and B. Kalitventzeff, 2003,
Targeting the Integration of Multi-Period Utility Systems for Site Scale Process Integration,
Applied Thermal Engineering, Vol. 23, pp. 1763-1784.

Marechal F., D. Favrat and E. Jochem, 2005,
Energy in the Perspective of the Sustainable Development: The 2000 W society challenge,
Ressources, Conservation and Recycling, Vol. 44, pp. 245-262

Mavormatis S.P. and A.C. Kokossis, , 1998a,
Conceptual Optimization Of Utility Networks For Operational Variations – I. Targets And Level Optimization,
Chemical Engineering Science, Vol. 53 (8), pp. 1585-1608.

Mavormatis S.P. and A.C. Kokossis, , 1998b,

Conceptual Optimization Of Utility Networks For Operational Variations – II. Network Development And Optimization,

Chemical Engineering Science, Vol. 53 (8), pp. 1609-1630.

Moita R.D, H.A. Matos, C. Fernandes, C.P. Nunes and J.M. Prior , 2005,

Dynamic Modelling And Simulation Of A Cogeneration System Integrated With A Salt Recrystallization Process
Chemical and Chemical Engineering, Vol. 29 (6), pp. 1491-1505.

McKane A., 2007,

Industrial Energy Management: Issues Paper,

Prepared for Expert Group Meeting: using energy management standards to simulate persistent application of energy efficiency in industry, Vienna, Austria, March 21-22.
Lawrence Berkley National Laboratory, xxxxxLBNL-xxxxxxx.

Méndez C.A., J. Cerda, I.E. Grossmann, I. Harjunkoski, M. Fahl, 2006,

State-Of-The-Art Review Of Optimization Methods For Short-Term Scheduling Of Batch Processes
Computers and Chemical Engineering, Vol. 30, pp. 913–946.

Momoh J.A., 2001,

Electric Power System Applications Of Optimization,

Marcel Dekker, Inc.

Moran M.J. and H.N. Shapiro, 1995,

An Energy Management Method For The Food Industry,

Published by: John Willey & Sons, Inc., ISBN 0-471-07681-3.

Muller C.A., F.M.A. Maréchal, T. Wolewinski, P.J. Roux, 2007,

An Energy Management Method For The Food Industry,

Applied Thermal Engineering, Vol. 27, pp. 2677-2686.

Mustapha D., T. Sabria and O. Fatima, 2007,

Distillation Of A Complex Mixture. Part II: Performance Analysis Of A Distillation Colum Using Exergy,

Entropy, Vol. 9, pp. 137-151.

N

Nishio. M, J. Itoh, K. Shiroko and T. Umeda, 1980,

A Thermodynamic Approach To Steam-Power System Design,

Industrial Engineering Chemical Process Design and Development, Vol. 19, pp. 306-312.

O

O'Callaghan P. W., 1993,

Energy Management,

Published by: McGraw-Hill International (UK) Limited, ISBN 0-07-707678-8.

P

Painuly J.P., 2001,
Barriers To Renewable Energy Penetration; A Framework For Analysis,
Renewable Energy, Vol. 24 (1), pp. 73-89.

Pantelides C.C., M.J. Realff and N. Shah, 1992,
Short-Term Scheduling Of Pipeless Batch Plants,
AIChe National Meeting, Miami.

Pantelides C.C., 1994,
Unified Framework For The Optimal Process Planning And Scheduling,
In: CACHE Publications. Proceedings of the Second Conference on Foundations of Computer Aided Operations, pp. 253-274.

Papoulias S.A. and I.E. Grossmann, 1983a,
A Structural Optimization Approach In Process Synthesis – I: Utility Systems
Computes and Chemical Engineering, Vol. 7 (6), pp. 695-706.

Papoulias S.A. and I.E. Grossmann, 1983b,
A Structural Optimization Approach In Process Synthesis – II: Heat Recover Networks
Computes and Chemical Engineering, Vol. 7 (6), pp. 707-722

Papoulias S.A. and I.E. Grossmann, 1983c,
A Structural Optimization Approach In Process Synthesis – III: Total Processing Systems
Computes and Chemical Engineering, Vol. 7 (6), pp. 723-734.

Pekny J.F. and G.V. Reklaitis, 1998,
Towards The Convergence Of Theory And Practice: A Technology Guide For Scheduling/Planning Methodology.
In: Proceedings of the 3rd International Conference on Foundations of Computer Aided Process operations, pp. 91-111.

Pilavachi P.A., 1998,
European Union Initiatives To Promote Energy Efficiency In The Process Industries,
Revue Générale de Thermique, Vol. 37 (3), pp. 159-164

Pinedo M.L., 2008,
Scheduling: Theory, Algorithms, And Systems,
Published by: Spriner, 3rd Edition, ISBN 978-0-387-78934-7.

Price L., S. de la Rue du Can, J. Sinton, E. Worrell, Z. Nan, J. Sathaye and M. Levine, 2006,
Sectoral Trends In Global Energy Use And Greenhouse Gas Emissions
Lawrence Berkeley National Laboratory, LBNL-56144.

Price L. and E. Xuejun, 2007,
Constraining Energy Consumption Of China's Largest Industrial Enterprises Through The Top-1000 Energy-Consuming Enterprise Program,
Lawrence Berkeley National Laboratory, LBNL-00000,
http://ies.lbl.gov/iespubs/2007aceee.pdf

Puigjaner L., 2007,
Extended Modeling Framework For Heat And Power Integration In Batch And Semi-Continuous Processes,
Chemical Product and Process Modeling, Vol. 2 (3), Article 3.

R

Reay D., 2008,
The Role Of Process Intensification In Cutting Greenhouse Gas Emissions,
Applied Thermal Engineering, Vol. 28, pp. 2011-2019.

Reklaitis G.V., 1991,
Review Of Scheduling And Planning Of Processes Operations,
In: Proc. PSE'91 Conference, Montebello, Canada

Reklaitis G.V., 1995,
Scheduling Approaches For The Batch Processes Industries,
ISA Transactions, Vol. 34, pp. 349 - 358

Reklaitis G.V., J. Pekny and G.S. Joglekar, 1997,
Scheduling and Simulation of Batch Processes
In: Handbook of *Batch Process* Design (PN Sharratt), ISBN 0-7514-03695

Rivero R., M. Garcia and J. Urquiza, 2004,
Simulation, exergy analysis and application of diabatic distillation to a tertiary amyl methyl ether production unit of a crude refinery,
Energy, Vol. 29, pp. 467-489

S

Sears, F.W. and Salinger, G.L. (1986),
Thermodynamics, Kinetic Theory, and Statistical Thermodynamics,
3rd edition (Addison-Wesley.)

Smith R., 2000,
State of the art in process integration,
Applied Thermal Engineering, vol. 20, No. 15-16, pp. 1337-1345

Smith R., 2005,
Chemical Process Design and Integration,
John Wiley & Sons Ltd, The Atrium, Southern Gate, Chichester, West Sussex PO19 8SQ, England.

Shah N., C.C. Pantelides and W.H. Sargent, 1993,
A General Algorithm for Short-term Scheduling of Batch Operations-II. Computational Issues.
Computers and Chemical Engineering, Vol. 2, pp. 229–244.

Shahihehpour M. and M. Alomoush, 2001,
Electric Power Systems Operation, Trading and Volatility,
Marcel Dekker, Inc.

Soylu A., C. Oruc, M. Turkay, K. Fujita and K. Asakura, 2006,
Synergy Analysis of Collaborative Supply Chain Management in Energy Systems Using Multi-period MILP,
European Journal of Operation Research, Vol. 174 (1), pp. 387-403.

Söderman J. and F. Pettersson, 2006,
Structural and Operational Optimization of Distributed Energy Systems,
Applied Thermal Engineering, Vol. 26, pp. 1400-1408.

Stankiewicz A.I. and J.A. Moulijn, 2000,
Process intensification: transforming chemical engineering,
Chemical Engieering Progress, Vol. 96 (1), pp. 23-34

Salgado F. and P. Pedrero, 2008,
Shorrt-term Operation Planning on Cogeneration Systems: A Survey,
Electric Power Systems Research, Vol. 78, pp. 835-848.

Spinner B. and E. Fabre, 2003,
Une politique de recherché et développement pour des énergies durable,
Action Concertée Energie du CNRS et du Ministère de la Recherche et des Nouvelles Technologies.

T

Tyrgg L. and B.G. Karlsson, 2005,
Industrial DSM in a deregulated European electricity market—a case study of 11 plants in Sweden,
Energy Policy, vol. 33, No. 11, pp. 1445-1459

Thery R., Hétreux G. Agha M., Hait A., Artigues C., Merce C., Fontan G., 2008a,
PRIME, Projet de réseau d'intégration multisite de l'énergie et de la production,
Rapport Final

Thery R., Hétreux G. Agha M., Hait A., Artigues C., Merce C., 2008b,
GIMEP, Gestion intégrée multisite de l'énergie et de la production,
réponse à l'appel à projet

Townsend D.W. and B. Linnhoff , 1984
Surface Area Targets for Heat Exchange Networks,
IChemE Conference, Bath, UK,

U

Utlu Z., Z. Sogut, A. Hepbasli and Z. Oktay, 2006,
Energy and exergy analysis of a raw mill in a cement production,
Applied Thermal Engineering, Vol. 26, pp. 2479-2489.

V

Varbanov P.S., S. Doyle and R. Smith, 2004,
Modelling and Optimization of Utility System,
Trans IChemE, Part A, Chemical Engineering Research and Design, Vol. 82(A5), pp. 561-578.

W

WECD, World Commission on Environment and Development, 1987,
Our Common Future,
Oxford University Press, Oxford, New York.

Waheed M.A., S.O. Jekayinfa, J.O. Ojediran, O.E. Imeokparia, 2008,
Energetic Analysis of Fruit Juice Processing Operations in Nigeria,
Energy, Vol. 33, pp. 35-45

Y

Yee T.F. and I.E. Gossmann, 1990,
Simultaneous Optimization Models for Heat Integration. II. Heat Exchanger Networks Synthesis,
Comp. & Chem. Eng., Vol. 14(10), pp. 1165-1184, 1990

Z

Zhang B.J. and B. Hua, 2005,

Effective MILP model for oil refinery-wide production planning and better energy utilization

Journal of Cleaner Production, Vol. 15, pp. 439-448.

Zumdahl, Steven S. (2005) "10.2 The Isothermal Expansion and Compression of an Ideal Gas."
Chemical Principles.
5th Edition. (Houghton Mifflin Company)

Sites internet

[1] ENERGY STAR,

U.S. Environmental Protection Agency and the U.S. Department of Energy

http://www.energystar.gov/index.cfm?c=bldrs_lenders_raters.pt_bldr (last accessed on 27th August, 2009)

[2] Industrial Technologies Program (ITP),

U.S. Department of Energy's Office of Energy Efficiency and Renewable Energy (EERE)

http://www1.eere.energy.gov/industry/ (last accessed on 27th August, 2009)

[3] CNRS, France
Programme Interdisciplinaire Energie du CNRS
http://energie.cnrs.ensma.fr/ (last accessed on 28th August, 2009)

[4] ANSI/MSE 2000-2008,

Management Systems for Energy,

http://www.mse2000.net/ (last accessed on 27th July, 2009)

[5] UNESCAP, United Nations Economic and Social Commission for Asia and the Pacific.

Promotion of cogeneration technology as a means of pollution control and increase in energy efficiency in industrial and commercial sectors,

www.unescap.org/esd/publications/energy/co-gen/contents.htm (last accessed on 27th July, 2009)